CAMBRIDGE
International Education

Syllabus

Cambridge International AS & A Level Design & Technology 9705

Use this syllabus for exams in 2028, 2029 and 2030.
Exams are available in the June and November series.

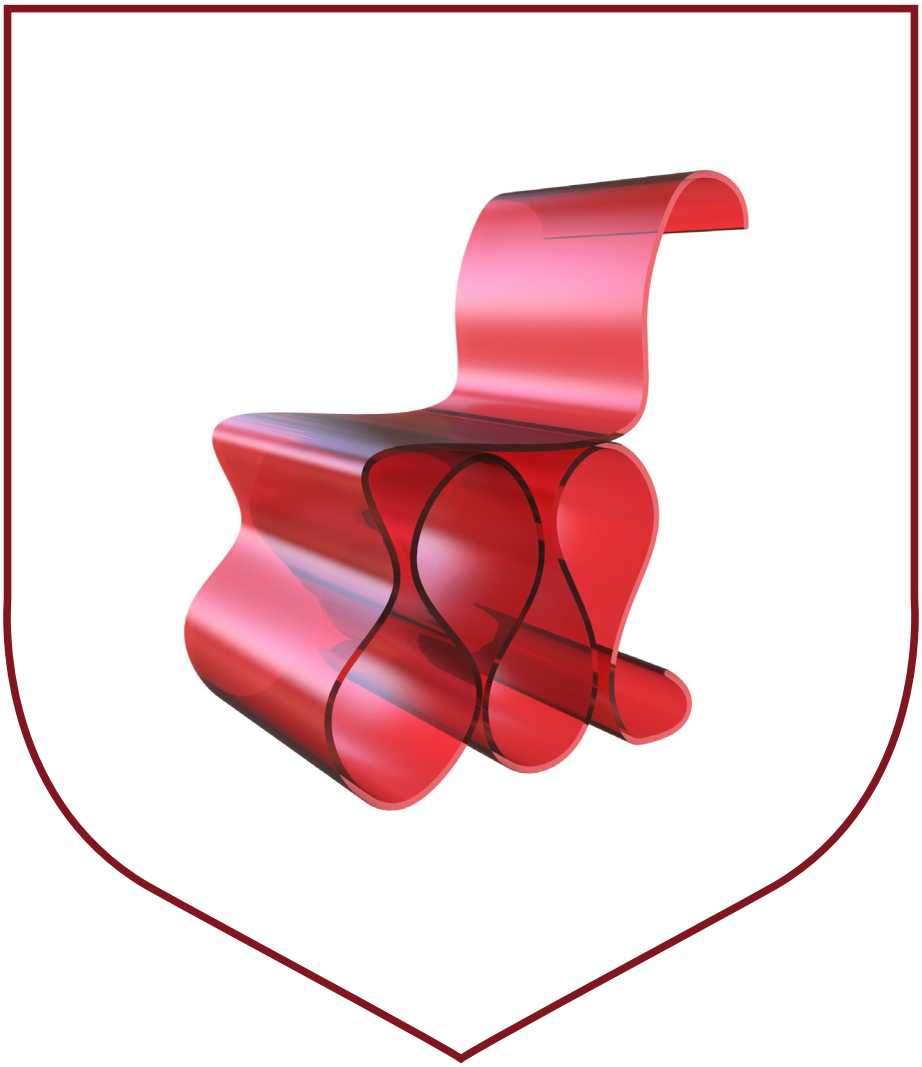

Version 1

For the purposes of screen readers, any mention in this document of Cambridge IGCSE refers to Cambridge International General Certificate of Secondary Education.

Cambridge Pathway

Why choose Cambridge?

We work with schools worldwide to build an education that shapes knowledge, understanding and skills. Together, we give learners the confidence they need to thrive and make a positive impact in a changing world.

As part of the University of Cambridge, we offer a globally trusted and flexible framework for education from age 3 to 19, informed by research, experience, and listening to educators.

With recognised qualifications, high-quality resources, comprehensive support and valuable insights, we help schools prepare every student for the opportunities and challenges ahead.

Qualifications that are recognised and valued worldwide

From the world's top-ranked universities to local higher education institutions, Cambridge qualifications open doors to a world of opportunities.

Setting a global standard

With over 160 years of experience in delivering fair, valid and reliable assessments to students worldwide, we offer a global, recognised performance standard for international education.

Your path, your way

Schools can adapt our curriculum, high-quality teaching and learning resources and flexible assessments to their local context. Our aligned offer helps Cambridge schools support every learner to reach their potential and thrive.

Learning with lasting impact

Cambridge learners build subject knowledge and conceptual understanding, and develop a broad range of skills, learning habits and attributes to help make them ready for the world.

Improving learning outcomes through data-led insight and action

Our trusted baseline and diagnostic assessments, together with our insights and evaluation service, help schools turn data into knowledge and actionable insights, to inform teaching decisions and improve learner outcomes.

Bringing together a community of experts

We bring together the collective knowledge of experts and our diverse community of educators worldwide, supporting them to learn from one another and share ideas and information.

Tackling the climate crisis together

We believe that education is key to tackling the climate crisis. Together with Cambridge schools, we can empower young people with the skills and knowledge to take action on climate change, helping them be ready for the world.

School feedback: 'We think the Cambridge curriculum is superb preparation for university.'

Feedback from: Christoph Guttentag, Dean of Undergraduate Admissions, Duke University, USA

© Cambridge University Press & Assessment September 2025

Cambridge International Education is the name of our awarding body and a part of Cambridge University Press & Assessment, which is a department of the University of Cambridge.

Cambridge University Press & Assessment retains the copyright on all its publications. Registered centres are permitted to copy material from this booklet for their own internal use. However, we cannot give permission to centres to photocopy any material that is acknowledged to a third party even for internal use within a centre.

Contents

Why choose Cambridge? **2**

1 Why choose this syllabus? **4**

2 Syllabus overview **8**

Aims 8
Content overview 9
Assessment overview 10
Assessment objectives 12

3 Subject content **14**

AS Level subject content 15
A Level subject content 27
Electronic symbols list 34

4 Details of the assessment **35**

Paper 1 – AS Level Written Paper 35
Component 2 – Product Analysis and Improvement Project 37
Assessment criteria for Component 2 44
Paper 3 – A Level Written Paper 51
Component 4 – Design, Realisation and Manufacturing Project 54
Assessment criteria for Component 4 61
Administration of Components 2 and 4 68
Command words 71

5 What else you need to know **72**

Before you start 72
Making entries 73
Accessibility and equality 74
After the exam 75
How students, teachers and higher education can use the grades 76
Changes to this syllabus for 2028, 2029 and 2030 77

Important: Changes to this syllabus

For information about changes to this syllabus for 2028, 2029 and 2030, go to page 77.

1 Why choose this syllabus?

Key benefits

The best motivation for a student is a real passion for the subject they are learning. Cambridge International AS & A Level give schools flexibility to offer a broad and balanced curriculum with a choice of over 50 subjects. Students can select the subjects they love and that they are best at, enabling them to reach their potential and thrive.

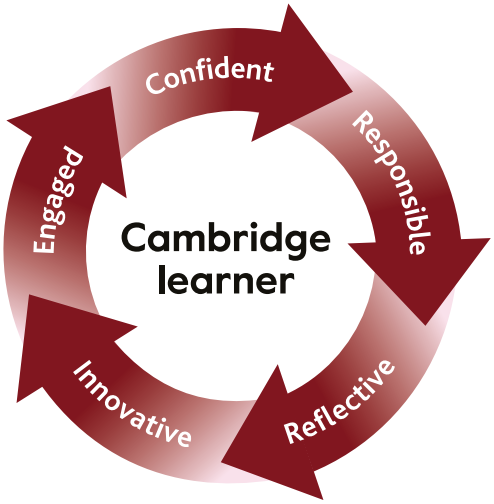

Following a Cambridge International AS & A Level programme helps students develop abilities which universities value highly, including:

- a deep subject knowledge
- conceptual understanding and higher-level thinking skills
- presenting ordered and coherent arguments
- independent learning and research.

Cambridge International AS & A Level Design & Technology provides opportunities for learners to understand the impact designing and making has on the world we live in. Learners develop and realise design proposals, considering industrial and business and commercial practices. The syllabus encourages innovative thinking and the development of a critical, reflective practice, which seeks to continually improve the design and performance of products.

Our approach in Cambridge International AS & A Level Design & Technology supports the development of learners who are:

confident, identifying, researching and evaluating design needs and applying technical knowledge and understanding to develop design proposals

responsible, in using resources for designing and making, and understanding the impact their use has on the wider world

reflective, critically evaluating their work as they continually review, refine and adapt design proposals

innovative, combining technical knowledge and understanding with creative thinking to solve design problems in new ways

engaged, enriching their work by exploring the work of different designers, design movements and design principles to inform their own work.

School feedback: 'Cambridge students develop a deep understanding of subjects and independent thinking skills.'

Feedback from: Principal, Rockledge High School, USA

Key concepts

Key concepts are essential ideas that help students develop a deep understanding of their subject and make links between different aspects. Key concepts may open up new ways of thinking about, understanding or interpreting the important things to be learned.

Good teaching and learning will incorporate and reinforce a subject's key concepts to help students gain:

- a greater depth as well as breadth of subject knowledge
- confidence, especially in applying knowledge and skills in new situations
- the vocabulary to discuss their subject conceptually and show how different aspects link together
- a level of mastery of their subject to help them enter higher education.

Carefully introducing and developing key concepts at the right time will help to underpin the teaching. You may identify additional key concepts which will also enrich teaching and learning.

The key concepts for Cambridge International AS & A Level Design & Technology are:

- **Designing and making in society**
  Designing and making moves everyday life forward, changing the way we work, shop, live and look. It develops the ability to think creatively, apply focused research and explore design opportunities arising from the needs, wants and values of users and clients. Everything man-made that surrounds us has gone through a design and refinement process and has changed over time. Design is about people, and making things work better for people.
- **Industrial and commercial practices**
  Designers need to have an insight into manufacturing industries, including stages of production, modern manufacturing methods and quality assurance and quality control checks. This allows them to develop their work from the making of a single product to planning to make a marketable product in quantity.
- **Design communication**
  Designers must be able to effectively communicate their design ideas through sketches, notes, models, drawings and digital design methods. Designers use these universal communication methods to develop design proposals and produce working drawings with sufficient detail to allow the product to be manufactured.
- **Creative thinking**
  Creative thinkers 'think outside the box', or look at design problems in new ways, allowing them to create unique and exciting products. This is important because if everyone just accepted things the way they are, there would never be any innovation or improvement. Sometimes great steps forward are taken because one aspect is looked at differently, and a new solution is designed.
- **Sustainable design**
  Design and technological activities can have a profound impact on the environment in terms of the materials used to make products, energy used during manufacture and use and disposal of the product at the end of its life. Understanding the need for sustainable designs, material reuse and recycling allows designers to develop products that will have little impact on the environment.
- **Emerging technologies**
  Designers need to be aware of technological developments in digital design and digital manufacture, including computer-aided design (CAD), computer-aided manufacturing (CAM), modelling and simulation. This allows designers to understand how technology is evolving and how we can design and manufacture products differently with the use of technology.

Qualifications that are recognised and valued worldwide

Cambridge qualifications prepare and equip learners with the skills they need to thrive at university and beyond. The world's best higher education institutions recognise our qualifications and value the critical thinking skills, independent research abilities and deep subject knowledge that Cambridge learners bring.

We continually work with universities and colleges in every part of the world to ensure that they understand and accept our qualifications. More than 2500 universities in over 90 countries formally recognise Cambridge qualifications, with many more accepting our qualifications on application.

UK ENIC, the national agency in the UK for the recognition and comparison of international qualifications and skills, has carried out an independent benchmarking study of Cambridge International AS & A Level and found it to be comparable to the standard of AS & A Level in the UK. This means students can be confident that their Cambridge International AS & A Level qualifications are accepted as equivalent, grade for grade, to UK AS & A Levels by leading universities worldwide.

A choice of assessment routes

Cambridge International AS & A Level offers a choice of assessment routes with staged assessment available in many subjects: Cambridge International AS Level can be offered as a standalone qualification or as part of a progression to Cambridge International A Level.

Cambridge International AS Level Design & Technology makes up the first half of the Cambridge International A Level course in Design & Technology and provides a foundation for the study of Design & Technology at Cambridge International A Level. The AS Level can also be delivered as a standalone qualification. Depending on local university entrance requirements, students may be able to use it to progress directly to university courses in Design & Technology or some other subjects. It is also suitable as part of a course of general education.

Cambridge International A Level Design & Technology provides a foundation for the study of Design & Technology or related courses in higher education. Equally it is suitable as part of a course of general education.

For more information about the relationship between the Cambridge International AS Level and Cambridge International A Level see the 'Assessment overview' section of the Syllabus overview.

Visit **www.cambridgeinternational.org/recognition-search** and university websites for the most up-to-date higher education entry requirements.

Learn more: **www.cambridgeinternational.org/recognition**

Supporting teachers

We believe education works best when teaching and learning are closely aligned to the curriculum, resources and assessment. Our high-quality teaching support helps to maximise teaching time and enables teachers to engage learners of all backgrounds and abilities.

We aim to provide the following support for each Cambridge qualification:

- Syllabus
- Specimen question papers and mark schemes
- Specimen paper answers
- Schemes of Work
- Example candidate responses
- Past papers and mark schemes
- Principal examiner reports for teachers

These resources are available on the School Support Hub at **www.cambridgeinternational.org/support**, our secure online site for Cambridge teachers. Your exams officer can provide you with a login.

Additional teaching & learning resources are also available for many syllabuses and vary according to the nature of the subject and the structure of the assessment of each syllabus. These can include ready-built lesson materials, digital resources and multimedia for the classroom and homework, guidance on assessment and much more. Beyond the resources available on the Schools Support Hub, a wide range of endorsed textbooks and associated teaching and learning support are available from Cambridge at **www.cambridge.org/education** and from other publishers. Resources vary according to the nature of the subject and the structure of the assessment of each syllabus.

You can also contact our global Cambridge community or talk to a senior examiner on our discussion forums.

Sign up for email notifications about changes to syllabuses, including new and revised products and services, at **www.cambridgeinternational.org/syllabusupdates**

Professional development

Find the next step on your professional development journey:

- **Introduction courses** – An introduction to Cambridge programmes and qualifications. For teachers who are new to Cambridge programmes or new to a specific syllabus.
- **Focus on Teaching courses** – These are for teachers who want to explore a specific area of teaching and learning within a syllabus or programme.
- **Focus on Assessment courses** – These are for teachers who want to understand the assessment of a syllabus in greater depth.
- **Marking workshops** – These workshops help you become more familiar with what examiners are looking for, and provide an opportunity to raise questions and share your experiences of the syllabus.
- **Enrichment Professional Development** – Transform your approach to teaching with our Enrichment workshops. Each workshop focuses on a specific area of teaching and learning practice.
- **Cambridge Professional Development Qualifications (PDQs)** – Practice-based programmes that transform professional learning for practicing teachers. Available at Certificate and Diploma level.

For more information visit **www.cambridgeinternational.org/support-and-training-for-schools**

Supporting exams officers

We provide comprehensive support and guidance for all Cambridge exams officers.
Find out more at: **www.cambridgeinternational.org/eoguide**

2 Syllabus overview

Aims

The aims describe the purposes of a course based on this syllabus.

Students following a course based on this syllabus will:

- select and apply appropriate design strategies based on an appreciation of good design principles
- develop knowledge and understanding of materials, tools, equipment, components and processes used in the designing and making of marketable products
- design and make quality products, taking into consideration industrial, business and commercial practices
- develop the verbal, written, digital and visual communication skills required for designing and making
- develop skills in identifying, analysing and drawing conclusions from information relevant to a design need
- understand the aesthetic, economic, ethical, environmental, social and cultural impact of existing and proposed designs on society
- develop innovative thinking when identifying and solving design needs.

We are an education organisation and politically neutral. The contents of this syllabus, examination papers and associated materials do not endorse any political view. We endeavour to treat all aspects of the exam process neutrally.

Content overview

Candidates for Cambridge International AS Level study Topics 1–12.

1 The design process
2 Design principles
3 Communication
4 Design and technology in society
5 Sustainable design
6 Health and safety
7 Aesthetics and ergonomics
8 Materials and components
9 Stages in materials processing
10 Materials processing
11 Energy and control systems
12 Technology

AS Level candidates also apply the AS Level content and skills in a practical context in the Component 2 coursework.

Candidates for Cambridge International A Level study the AS Level topics **and** the following topics:

13 Industrial practices
14 Business and commercial practices
15 Quantity production
16 Materials processing in industry
17 Quality systems
18 Digital technology.

A Level candidates also apply the AS and A Level content and skills in a practical context in Component 4 coursework.

School feedback: 'Cambridge International AS & A Levels prepare students well for university because they've learnt to go into a subject in considerable depth. There's that ability to really understand the depth and richness and the detail of a subject. It's a wonderful preparation for what they are going to face at university.'

Feedback from: US Higher Education Advisory Council

Assessment overview

AS Level candidates take Paper 1 and Component 2.

A Level candidates take Papers 1 and 3 and Components 2 and 4.

Paper 1	
AS Level Written Paper 100 marks	2 hours 15 minutes
Candidates answer **all** questions.	
Questions are based on the AS Level subject content.	
Externally assessed	
50% of the AS Level	
25% of the A Level	

Paper 3	
A Level Written Paper 100 marks	2 hours 30 minutes
Candidates answer **all** questions.	
Questions are based on the A Level subject content but knowledge of the AS Level subject content is required.	
Externally assessed	
25% of the A Level	

Component 2
Product Analysis and Improvement Project 50 marks
Candidates complete a Product Analysis and Improvement Project.
Knowledge of the AS Level subject content is required.
Internally assessed and externally moderated
50% of the AS Level
25% of the A Level

Component 4
Design, Realisation and Manufacturing Project 50 marks
Candidates complete a Design, Realisation and Manufacturing Project.
Knowledge of the AS Level and A Level subject content is required.
Internally assessed and externally moderated
25% of the A Level

Information on availability is in the **Before you start** section.

Check the samples database at **www.cambridgeinternational.org/samples** for submission information, forms and deadlines for Components 2 and 4.

There are three routes for Cambridge International AS & A Level Design & Technology:

	Route	Paper 1	Paper 2	Paper 3	Paper 4
1	**AS Level only** (Candidates take all AS components in the same exam series)	yes	yes	no	no
2	**A Level** (staged over two years) Year 1 AS Level*	yes	yes	no	no
	Year 2 Complete the A Level			yes	yes
3	**A Level** (Candidates take all components in the same exam series)	yes	yes	yes	yes

* Candidates carry forward their AS Level marks subject to the rules and time limits described in the *Cambridge Handbook*. See **Making entries** for more information about carrying forward marks.

Candidates following an AS Level route are eligible for grades a–e. Candidates following an A Level route are eligible for grades A*–E.

Assessment objectives

The assessment objectives (AOs) are:

AO1 Knowledge and understanding

Candidates should be able to:

- demonstrate knowledge and understanding of a range of materials, tools, equipment and components used in design and technological activity **(AO1a)**
- demonstrate knowledge and understanding of a range of processes and practices used in design and technological activity **(AO1b)**
- demonstrate knowledge and understanding of the impact of design and technology on society (including cultural, economic, environmental and social factors) **(AO1c)**

AO2 Application and communication

Candidates should be able to:

- apply knowledge, understanding and skills in a variety of contexts **(AO2a)**
- communicate knowledge and understanding using sketches, notes and a range of graphical techniques, including conventions and specialist vocabulary **(AO2b)**

AO3 Development of design ideas and practical skills

Candidates should be able to:

- prepare a design brief relating to a situation or need **(AO3a)**
- analyse needs and produce a design specification, taking account of human, aesthetic, technical and environmental factors **(AO3b)**
- generate conceptual ideas and evaluate them using an iterative design process, leading to the creation of a design proposal **(AO3c)**
- refine and develop procedures to finalise a design proposal, recognising the constraints of time, cost and resources, and plan for making **(AO3d)**
- realise a design proposal safely and demonstrate proficiency in a range of practical skills with attention to fine detail **(AO3e)**

AO4 Analysis and evaluation

Candidates should be able to:

- analyse, evaluate and compare products **(AO4a)**
- identify and/or propose how to improve and/or modify products **(AO4b)**
- test and evaluate products, including evaluating and planning the manufacturing systems used to manufacture products in quantity **(AO4c)**
- analyse wider issues in design and technology (including cultural, economic, environmental and social factors) **(AO4d)**

Weighting for assessment objectives

The approximate weightings allocated to each of the assessment objectives (AOs) are summarised below.

Assessment objectives as a percentage of the qualification

Assessment objective	Weighting in AS Level %	Weighting in A Level %
AO1 Knowledge and understanding	25	20
AO2 Application and communication	15	15
AO3 Development of design ideas and practical skills	30	40
AO4 Analysis and evaluation	30	25
Total	100	100

Assessment objectives as a percentage of each component

Assessment objective	Weighting in components %			
	Paper 1	Component 2	Paper 3	Component 4
AO1 Knowledge and understanding	50	0	35	0
AO2 Application and communication	35	0	25	0
AO3 Development of design ideas and practical skills	0	60	25	68
AO4 Analysis and evaluation	15	40	15	32
Total	100	100	100	100

3 Subject content

This syllabus gives you the flexibility to design a course that will interest, challenge and engage your learners. Where appropriate you are responsible for selecting resources and examples and subject contexts to support your learners' study. These should be appropriate for the learners' age, cultural background and learning context as well as complying with your school policies and local legal requirements.

Candidates for Cambridge International AS Level study Topics 1–12. They also complete Component 2.

Candidates for Cambridge International A Level study the AS Level topics **and** Topics 13–18. They also complete Components 2 and 4.

The AS Level subject content is required knowledge for A Level Paper 3 and Component 4.

Teachers should ensure that candidates are prepared for the assessment of both the theory and practical coursework requirements.

AS Level subject content

The AS Level subject content is assessed in Paper 1 and is required knowledge for Paper 3 and Components 2 and 4.

1 The design process

Candidates learn about different approaches to designing and actions that are undertaken when designing.

Content

Approaches to designing

- Different approaches to designing, including:
  - iterative design
  - intuitive design.

Stages in design thinking

- The key stages in design thinking:
  - empathise: research your users' needs
  - define: state your users' needs and problems
  - ideate: challenge assumptions and create ideas
  - refine: develop ideas through an iterative process
  - realise: start to create solutions
  - test: try out your solutions.

Analysis of products

- The analysis of products in terms of:
  - function
  - aesthetics
  - ergonomics
  - types and properties of materials
  - production processes
  - target market/customers
  - cost
  - safety of the user
  - quality control (including standards such as use of non-toxic paints or electrical safety)
  - sustainability.

continued

1 The design process continued

Stages in the design process

- The key stages in the design process:
  - identifying an original design need or how an existing product can be improved
  - preparing a design brief that accurately describes a design need
  - finding, gathering and analysing information relevant to a design need
  - completing primary and secondary research relevant to a design need, including the use of market research tools such as observations, interviews and questionnaires
  - drawing up a design specification of requirements which are succinct, justified and measurable
  - generating and recording possible solutions
  - developing and refining ideas using further research and analysis and checking against the design specification
  - evaluating possible solutions through a variety of techniques and selecting one solution for development
  - modelling aspects of ideas and proposals to test and see how a product looks and its viability
  - developing and formulating a detailed design proposal for a product
  - identifying the resources required to realise a product
  - organising the resources to realise a product
  - planning the efficient use of materials, energy and other resources required to make a product
  - realising a product using appropriate tools and equipment
  - applying the health and safety procedures required in a school workshop or practical area
  - applying appropriate tests to assess the success of a product
  - proposing further improvements to a product.

2 Design principles

Candidates learn about factors that have a significant influence on the design of a product.

Content

- The concept of good design. A good design:
  - always meets the needs, wants or values of the user(s)
  - is innovative
  - is simple (less is more)
  - is aesthetic/visually pleasing
  - is long lasting
  - is environmentally friendly
  - is safe to use
  - makes the product useful
  - makes the product understandable.
- The influence of the following design movements on the design of products:
  - Art Deco
  - Arts and Crafts
  - Bauhaus
  - Scandinavian
  - Minimalism
  - Modernism
  - Postmodernism.
- The impact of the following on the design of new products:
  - scale of production (individual (one-off), batch and mass production)
  - production processes
  - costs (material costs and production costs)
  - changing customer requirements
  - social and cultural changes
  - fashion and trends
  - the availability of materials and resources
  - new manufacturing technologies
  - changing legal and environmental requirements.

3 Communication

Candidates develop the communication skills required for designing and making, including conventions and specialist vocabulary.

Communication methods can be hand-drawn or technology-based methods. Candidates need to be able to use hand-drawn methods in Paper 1 and Paper 3. Either hand-drawn or technology-based methods can be used in the coursework components.

Content

- 2D and 3D presentation techniques:
  - freehand sketching, including exploded and sectional views (cut-away) drawings/sketches
  - accurate isometric drawings, including the construction of arcs and circles
  - estimated one- and two-point perspective drawings
  - accurate planometric drawings (45/45).
- Enhancement techniques, including:
  - the use of tone and colour
  - material representation
  - the use of shadows.
- Developments (nets), including glue tabs and mechanical joining methods, required to form:
  - prisms
  - cones
  - cylinders
  - pyramids.
- First and third angle orthographic working drawings, including:
  - use of scales
  - dimensioning
  - symbols and conventions, e.g. BS 308 or BS 8888
  - part drawings
  - sectional views.
- Planning drawings, including:
  - flowcharts
  - Gantt charts
  - materials or cutting lists.
- The use of digital technology to communicate, including:
  - common software packages, e.g. Microsoft Word, Microsoft Excel, Microsoft PowerPoint, Adobe® Acrobat Pro
  - email
  - collaboration software, e.g. Microsoft Teams and Miro
  - video conferencing.

4 Design and technology in society

Candidates develop an appreciation of the impact designing and making activities have on society.

Content

- The impact design and technology activities have on:
  - individuals
  - groups of people, e.g. by geographic location, religion or ethnicity
  - society and culture.
- How products can be inclusive or exclusive in their design and can be used by a wide range of users, including:
  - those with particular needs (such as people who are visually impaired or hearing impaired or who have physical support needs or neurodiverse requirements)
  - those from different age groups (from children to the elderly).

5 Sustainable design

Candidates develop an appreciation of the impact designing and making activities have on the environment.

Content

- The responsibilities of designers and manufacturers in ensuring products and packaging are made from sustainable materials and components.
- Factors that are considered when designing products to have minimum impact on the environment:
  - raw material extraction
  - energy consumption
  - ease of repair and maintenance
  - disposal at the end of life.
- Ways to modify designs to make them more sustainable, including:
  - reducing the quantity of materials used
  - reducing the number of manufacturing processes
  - designing products that can be easily repaired
  - using standardised components
  - making products easy to disassemble or separate
  - reusing components and parts
  - using eco-friendly alternative materials
  - using recycled materials
  - using locally available materials
  - reducing the need for transport costs
  - finding alternative manufacturing processes
  - reducing the amount of waste products produced during manufacturing
  - reducing the amount of energy required in manufacturing processes
  - improving the efficiency of manufacturing processes
  - labelling of materials to aid separation for recycling.

6 Health and safety

Candidates learn the importance of maintaining a safe working environment during designing and making activities.

Content

- Standard risk assessment procedures in product design and manufacture.
- Safe working practices, including identifying hazards and making risk assessments.
- Safe working practices in a school workshop or practical area, including:
  - wearing appropriate personal protective equipment (PPE) for the relevant machine or process such as goggles, visor, face mask, gloves, apron or lab coat
  - tying long hair back and rolling up sleeves
  - using welding goggles for welding and gauntlets and spats for hot metal working
  - keeping areas clean
  - using the correct tool for the job
  - stopping when needed to address hazards
  - using the safety guards on machinery when needed
  - applying manual handling precautions
  - receiving safety training around material properties (e.g. corrosive or toxic materials)
  - working under supervision
  - receiving safety training in the use of tools, equipment and machinery.
- Action to be taken when hazards are identified or when accidents occur in a school workshop or practical area.

7 Aesthetics and ergonomics

Candidates learn the importance of the visual appearance of a product and of designing environments, products and systems to fit the people who use them.

Content

- How aesthetics is concerned with the visual appearance of a product.
- The use of line, colour, shape, proportion and form to improve visual appearance.
- The appreciation of the effects of light and shade on solid forms and of different surface finishes on visual and tactile senses.
- The balance of form and function.
- How ergonomics is concerned with understanding how humans interact with environments, products and systems.
- The common anthropometric measurements, including weight, height, knee height, sitting height, body mass index (BMI), body circumference (arm, waist, hip and calf) and waist-to-hip ratio (WHR).
- The interpretation and application of anthropometric data to design development.

8 Materials and components

Candidates learn about materials used in the design and manufacturing of products and consider why they are used, including papers and boards, modelling materials, woods, metals, polymers, composite materials, smart materials, modern materials and biodegradable materials. They also learn about how materials and components can be selected to ensure suitability for purpose.

Candidates should learn the electronic symbols list on page 34 of the syllabus. Questions in the assessment on electronic components and symbols are based on this list.

Content

Papers and boards

- The working properties, stock forms and sizes, common uses and environmental impact of the following:
  - copier paper
  - card
  - corrugated card
  - bleached card
  - mount board
  - duplex card
  - moulded paper pulp.

Modelling materials

- The working properties, stock forms and sizes, common uses and environmental impact of the following:
  - extruded polystyrene foam, e.g. Styrofoam™
  - balsa wood
  - polymorph
  - plaster of Paris.

Woods

- The working properties, stock forms and sizes, common uses and environmental impact of the following:
  - softwoods
    - pine, cedar, fir, spruce or equivalent local softwood
  - hardwoods
    - beech, oak, ash, teak or equivalent local hardwood.

continued

8 Materials and components continued

Metals

- The working properties, stock forms, sizes and extrusions, common uses and environmental impact of the following:
  - ferrous metals
    - cast iron
    - mild steel
    - stainless steel
    - high speed steel
    - carbon steels
  - non-ferrous metals and their alloys
    - aluminium
    - copper
    - lead
    - tin
    - zinc
    - titanium
    - tungsten
    - duralumin
    - brass.

Polymers

- The working properties, stock forms, sizes and extrusions, common uses and environmental impact of the following:
  - thermoplastics
    - acrylic (PMMA)
    - nylon
    - polyvinyl chloride (PVC)
    - polystyrene (PS)
    - polypropylene (PP)
    - high and low density polyethylene (HDPE) (LDPE)
    - high impact polystyrene (HIPS)
    - polycarbonate (PC)
    - acrylonitrile butadiene styrene (ABS)
    - polyethylene terephthalate (PET)
    - fluted or corrugated polypropylene (Corriflute ®)
  - thermosetting plastics
    - polyester resin
    - melamine formaldehyde (MF)
    - urea formaldehyde (UF)
    - epoxy resin

continued

8 Materials and components continued

- elastomers
  - neoprene
  - silicone
  - thermoplastic elastomer (TPE)
  - rubber.

Composite materials

- The working properties, stock forms and sizes, common uses and environmental impact of the following:
  - foam core/foam board
  - foil backed and laminated card, e.g. Tetra Pak®
  - manufactured boards
    - chipboard
    - engineered wood
    - medium density fibreboard (MDF)
    - plywood
    - blockboard
  - fibre reinforced materials
    - glass fibre reinforced plastic (GRP)
    - carbon fibre reinforced plastic (CFRP).

A composite material is a material that combines two or more materials with different properties.

Smart materials

- The working properties, common uses and environmental impact of the following:
  - pigments
    - phosphorescent
    - photochromic
    - thermochromic
  - shape memory alloys (SMA)
    - nickel-titanium
    - copper-aluminium-nickel
  - hydrogels
  - shape memory polymers.

A smart material is a material that responds, in a reversible way, to a change in environmental conditions.

continued

8 Materials and components continued

Modern materials

- The working properties, common uses and environmental impact of the following:
  - nanomaterials
    - oleophobic coatings
    - hydrophobic materials
  - metal foams
  - super alloys
  - bioplastics
    - starch-based
    - sugar-based
    - cellulose-based.

A modern material is one that has been engineered to have improved properties.

Biodegradable materials

- The working properties, common uses and environmental impact of the following:
  - polylactide (PLA)
  - polyhydroxybutyrate (PHB), e.g. BIOPOL®
  - plastic made from corn/potato starch.

A biodegradable material is one that will decompose or break down naturally as a result of microbial action.

Components

- Electronic components and symbols used in control systems.
- Electronic symbols list (Please see page 34).

Material properties

- The significance of the following material properties in terms of use as part of a product:
  - hardness
  - ductility
  - toughness
  - brittleness
  - elasticity
  - malleability
  - dimensional stability
  - electrical conductivity
  - thermal conductivity
  - corrosion resistance.

9 Stages in materials processing

Candidates learn about stages in materials processing that apply to making a product.

Content

- Measuring and/or marking out from working drawings and using tools and methods appropriate to the materials.
- Cutting, shaping and forming of materials using appropriate tools and methods.
- Joining and assembling materials using a range of temporary and permanent methods.
- Selecting and applying a finish which is appropriate for the material used and the product design.

10 Materials processing

Candidates learn about processing techniques to be used when working with materials specified in Topic 8 Materials and components in a school workshop or practical area.

Content

- The use of the following processing techniques:
  - wastage
    - cutting with hand and machine tools, including laser cutter
    - vinyl cutting machine
    - drilling, using hand, powered and press drills
    - turning, using a wood lathe and centre lathe
    - milling and routing
    - use of abrasives
  - forming
    - vacuum forming, including the design and construction of formers
    - line bending
  - addition
    - fabrication
  - finishing
    - paints
    - polymer coatings
    - varnishes, including UV and spot varnishing
  - printing
    - digital printing
    - screen printing.

11 Energy and control systems

Candidates learn about the main sources of energy, forms of energy and methods of conversion and transmission and why they are used.

Candidates also need to develop an understanding of why these are used in the manufacturing of products.

Content

- Main sources of energy:
  - fossil fuels such as oil, natural gas and coal (finite)
  - water, wind and solar (renewable).
- Comparison of the main sources of energy.
- Different forms of energy, including:
  - kinetic
  - potential
  - thermal
  - electrical
  - chemical.
- Practical and efficient methods of conversion and transmission of energy through simple mechanisms, machines, engines, turbines and electric motors.
- Basic principles of manual, semi-automatic and automatic control using input, output, feedback and amplification.

12 Technology

Candidates learn about emerging technologies and how they impact on designing and making products.

Content

- Technological developments and how they can affect the design and manufacture of products.
- The terms invention, innovation and evolution.
- The use of CAD (computer-aided design) for the storage and retrieval of data and the manipulation of images to aid design, production and management.
- The principal features of CAM (computer-aided manufacture), particularly in the control/operation of machines.
- The impact of the following emerging technologies on designing and making:
  - rapid prototyping, including 3D printing
  - rapid manufacture
  - robotics
  - artificial intelligence (AI)
  - virtual reality (VR).

A Level subject content

The A Level subject content is assessed in Paper 3 and is required knowledge for Component 4.

Paper 3 requires knowledge of the AS Level subject content.

13 Industrial practices

Candidates learn about industrial practices and why they are used in a specific manufacturing industry.

Candidates also need to develop an understanding of why these industrial practices are used in the manufacturing industry.

Content

- The range of service sectors in design and manufacturing industries, including:
  - extraction of raw materials
  - design and development
  - manufacturing
  - marketing and sales
  - repair and maintenance.
- The roles of a designer, manufacturer and consumer.
- The roles of different workers within a manufacturing industry.
- The production processes used in a manufacturing industry.
- The advantages/disadvantages of hand and automated production systems used in manufacturing products.
- How technology-based systems are used by designers, manufacturers, retailers and consumers.
- How digital technology is used in the design and development, manufacturing, marketing and sale of products.

14 Business and commercial practices

Candidates learn about business and commercial practices and why they are used in manufacturing industries.

Content

- The importance of identifying and satisfying consumer needs, to provide a product that customers will buy.
- The stages in a product's life cycle:
  - research and development
  - introduction
  - growth
  - maturity
  - decline.
- The use of a product extension strategy when a product enters its decline stage.
- The advantages and disadvantages of product extension strategies, such as:
  - discounting
  - updating packaging
  - adding more features.
- The types of market research methods, such as:
  - surveys/questionnaires
  - interviews
  - focus groups
  - customer observation.
- The purpose of market research relating to:
  - demand
  - competition
  - target market.
- How and why businesses target customers by:
  - demographics
  - socio-economic background.
- The elements of the marketing mix (4Ps):
  - price
  - product
  - promotion
  - place.
- The relationship between the scale of production and unit cost.

15 Quantity production

Candidates learn about the systems used in industry to manufacture products and their suitability for individual (one-off), batch or mass production.

Content

- The differences between a:
  - model
  - prototype
  - marketable product.
- The preparation of a design brief for a marketable product.
- The preparation of a manufacturing specification used to make a product in quantity.
- The differences between individual (one-off), batch and mass production systems and how each impact on the:
  - product
  - people involved
  - resources and costs.
- Commercial manufacturing systems, including:
  - concurrent engineering
  - computer-integrated manufacturing (CIM) and computer-integrated engineering (CIE)
  - cell production
  - in-line assembly
  - just in time (JIT)
  - logistics.
- The design of a manufacturing system, including jigs and formers, to be used to make a product in quantity.
- Strategies to evaluate how well a manufacturing system has worked.
- Improvements to a manufacturing system, including the use of templates to mark out shapes repeatedly and jigs and formers used to make a product.
- Continuous improvement processes, such as Kaizen™.

16 Materials processing in industry

Candidates learn about the processing techniques to be used when working with materials specified in Topic 8 Materials and components and Topic 10 Materials processing to produce individual (one-off), batch or mass-produced products.

Content

- Shaping
  - die cutting, creasing and folding
  - turning (wood and metal lathes)
  - calendering
  - plasma cutting.
- Forming
  - blow moulding (from a pre-form and extrusion)
  - steam bending
  - laminating
  - press forming
  - spinning.
- Redistribution methods
  - sand, resin and die casting
  - injection moulding
  - extrusion
  - rotational moulding
  - compression moulding
  - 3D printing.
- Wasting
  - CNC milling
  - stamping.
- Fabrication.
- How similar and dissimilar materials are joined:
  - permanently
    - with nails and pins
    - by heat (soldering, brazing and welding)
    - with adhesives
      - spray mount
      - hot melt glue
      - polystyrene cement
      - PVA (polyvinyl acetate)
      - all-purpose glue
      - two-part epoxy resin
      - solvent cement (Tensol 12®)

continued

16 Materials processing in industry continued

  - temporarily
    - nuts and bolts
    - screws
    - knock down (KD) fittings
    - standard components (plastic rivets/split pins/staples/Velcro®)
    - tabs/flaps/locking tabs used on thin sheet material.
- How materials are enhanced through processes and additives, including:
  - metal enhancement
    - work hardening
    - annealing
    - case hardening
    - hardening and tempering
  - polymer additives
    - plasticisers
    - pigment
    - fillers
    - anti-static
    - flame retardants
    - stabilisers
    - bio-batch.
- The different methods of printing and common applications for these methods, including:
  - offset lithography
  - flexography
  - gravure
  - sublimation printing
  - pad printing.
- The CYMK colour separation method.
- The advantages and disadvantages of the colour separation method during printing.
- The advantages/disadvantages of applying finishes to a material to improve:
  - performance
  - aesthetics.
- Types of finish and methods of application, including:
  - embossing/debossing paper and card
  - UV varnishing/spot varnishing on paper and card
  - hot foil blocking on paper and card
  - paints
  - sealants
  - varnishes
  - anodising
  - plating
  - coating.
- Physical tests to determine the suitability of materials and components for the application of a finish.

17 Quality systems

Candidates learn about developing quality systems that could be used in the production of a product.

Content

- Quality assurance (QA) checks to be used in the production of a product. (Quality assurance checks are made at every stage of the production process to meet the quality standards set.)
- Quality control (QC) checks to be used on a made product. (Quality control checks are made to a finished product to see if it meets the quality standards set.)
- The benefits of introducing Total Quality Management (TQM) to a production process. (Total Quality Management involves applying quality assurance procedures at every stage of the production process.)
- The benefits of quality systems to the manufacturer and the consumer.
- Product testing methods that can be used before or during the manufacturing of products, such as:
  - material testing
  - dimensional checks
  - joining/assembly checks
  - visual checks.
- The organisations that are responsible for quality standards within the candidate's country such as the International Organization for Standardization (ISO).
- The quality standards concerned with testing products, components and materials against external quality standards, e.g. ISO 9013 (thermal cutting) or ISO 34257 (wood adhesives).

18 Digital technology

Candidates learn about the advantages and disadvantages of the use of digital technology.

Content

Computer-aided design (CAD)

- The different software programs that are available to designers and manufacturers to design and develop products, including:
  - desktop publishing software
  - photo manipulation software
  - technical drawing software
  - 3D modelling software.
- The advantages and disadvantages to a designer or manufacturer of using these types of software programs and the appropriateness of their use.

Computer-aided manufacture (CAM)

- The different methods of CAM which can be used when constructing products and the common uses for such methods, including:
  - digital printing
  - vinyl cutting
  - laser cutting
  - 3D printing (stereolithography and fused deposition).
- The advantages and disadvantages of different methods of CAM production.

Information technology (IT)

- The advantages and disadvantages to a designer or manufacturer when using a range of digital communication methods to design and manufacture products, including:
  - email
  - web conferencing
  - collaborative working through technology
  - radio frequency identification (RFID) systems
  - augmented reality (AR).

Electronic symbols list

Input components

Process components

Resistor values in ohms (Ω)
Multiple values kΩ, MΩ

Capacitor values in
Farads F, μF, nF, pF

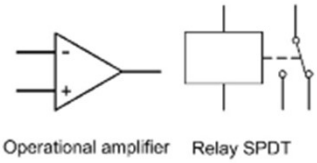

Output components

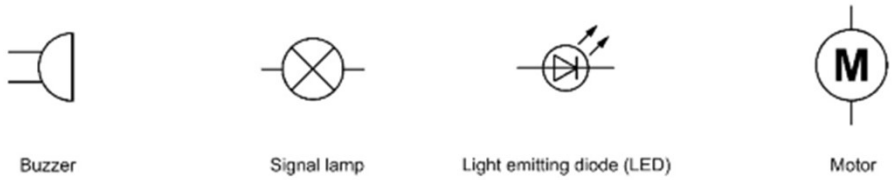

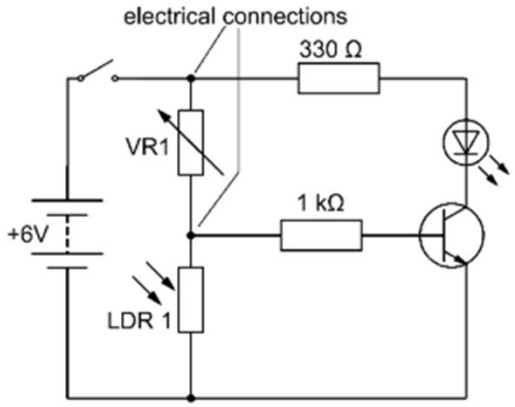

Example of a light sensing circuit with LED output

Faculty feedback: 'Understanding how and why our climate is changing and providing the knowledge and skills to explore the challenges plays a key role in every student's education.'

Feedback from: Dr Amy Munro-Faure, Head of Education and Student Engagement of Cambridge Zero

4 Details of the assessment

AS Level candidates take Paper 1 and Component 2.

A Level candidates take Papers 1 and 3 and Components 2 and 4.

Paper 1 – AS Level Written Paper

Written paper, 2 hours 15 minutes, 100 marks

Candidates answer **all** questions.

Questions are based on the AS Level subject content.

Paper 1 tests the following assessment objectives:

- AO1 Knowledge and understanding: 50%
- AO2 Application and communication: 35%
- AO4 Analysis and evaluation: 15%.

Paper 1 consists of:

- structured questions
- one design modification question
- one extended response question on the wider issues in design and technology.

Candidates should use a black or dark blue pen for written responses. An HB pencil or coloured pencils may be used for any sketches, drawings or rough working.

Candidates answer in the spaces provided on the A4 question paper.

Structured questions (76 marks)

The structured questions test knowledge and understanding of the AS Level subject content.

Candidates are also asked to demonstrate their communication skills using sketches and notes and a range of graphical techniques, including conventions and specialist vocabulary.

The structured questions can also ask candidates to use sketches and notes and to apply the knowledge and understanding they have acquired to a particular product, scenario or context. Candidates should be able to apply their knowledge and understanding to an unfamiliar product, scenario or context. Knowledge of the context is not required.

The structured questions can be divided into part-questions based on the same product, scenario or context. Candidates must answer all the part-questions for each question.

Candidates should be aware of the marks for each part-question. These are printed on the question paper. Candidates should use them as a guide to the amount of detail and length of response expected and to help them manage their time effectively.

Design modification question (12 marks)

The design modification question is marked with the generic levels of response marking grids testing 6 marks AO2 Application and communication and 6 marks AO4 Analysis and evaluation.

The question asks candidates to consider how a product could be modified to suit a specific context or group of users.

Candidates need to be able to communicate their proposed modification with precision and clarity using sketches with detailed annotations, including appropriate conventions and specialist vocabulary.

The proposed modification should be based on an analysis and evaluation of the product and include an analysis of the wider issues (cultural, economic, environmental and social factors) in design and technology.

A good response to a design modification question will propose a modification that:

- demonstrates accurate knowledge and a thorough understanding of the context
- demonstrates high quality communication, using sketches and detailed annotations
- is based on analysis, evaluation and/or comparison of products
- is appropriate and will function as intended
- shows a thorough analysis of the wider issues in design and technology.

Extended response question on the wider issues in design and technology (12 marks)

The extended response question is worth 12 marks and is marked with generic levels of response marking grids testing 6 marks AO1 Knowledge and understanding and 6 marks AO4 Analysis and evaluation of the wider issues in design and technology. It tests the following assessment objectives:

- Demonstrate knowledge and understanding of the impact of design and technology on society (including cultural, economic, environmental and social factors) (AO1c)
- Analyse, evaluate and compare products (AO4a)
- Analyse wider issues in design and technology (including cultural, economic, environmental and social factors) (AO4d).

Candidates should answer in continuous prose and structure their response in paragraphs. The response should focus on the question and show an understanding of the impact of design and technology on society. Candidates should support their response with relevant examples and supporting evidence.

A good response to an extended response question will:

- demonstrate accurate and relevant knowledge of the topic
- demonstrate an understanding of the impact of design and technology on society, using relevant examples
- analyse, evaluate and compare products as appropriate
- analyse the impact of wider issues in design and technology.

The marking grids for Paper 1 are published in the specimen mark scheme for Paper 1 which accompanies the syllabus. This is available on the syllabus page at **www.cambridgeinternational.org/9705** and our School Support Hub.

Equipment for Paper 1

Candidates should have the following in the examination room:

- standard drawing equipment: pencil, rubber, ruler and protractor
- coloured pencils
- calculator.

Component 2 – Product Analysis and Improvement Project

Coursework, 50 marks, internally assessed and externally moderated, approx. 45 hours

Overview

Candidates identify an existing product on which they will base their improvement project. The product should be an existing commercial product that is on the market and not a product made in school or as part of a previous Design & Technology coursework task. Candidates then create a coursework portfolio containing detailed research and analysis of the existing product and how that product could be improved in terms of function, ergonomics, safety or sustainability. They must identify a series of problems or opportunities for improvement through the analysis and focus on **one** of these areas to improve the design of the product. This component has been designed to be flexible so that candidates can choose an existing product that reflects the area of design and technology that appeals to them.

Candidates have a choice of materials to make their improvement. For example, it could be made from resistant materials such as wood, metal or plastics, or it could be made from paper, card, thin sheet plastic or modelling materials, or it could bring in the use of systems and control technology such as electronics where appropriate. Candidates can go beyond the materials listed in Topic 8 Materials and components.

Candidates select a single, named, specific product that they have some familiarity with.

Candidates are free to choose their own product to improve. However, they must ensure that the chosen product has scope for the improvement project and that candidates will be able to fulfill the requirements of the coursework improvement project.

Candidates should then design a suitable proposal for **one** improvement. The area or element chosen for improvement will need to give enough scope for it to be redesigned to, for instance, improve the design for product usage or lifespan or for it to be disposed of in a more sustainable way. Only changing one element of the product such as the colour or the material it is made from is not sufficient to fully meet the requirements of the project; there must be sufficient scope for it to be redesigned in a substantive way.

The iterative design process should be clearly documented with annotated sketches, photographs or screenshots. The model with its improvements should be constructed, tested and evaluated and the construction, tests and evaluation should be recorded as part of the portfolio.

This is **not** a complete redesign of a product but an opportunity for the candidate to **develop** or **improve** the product in some way.

Candidates need to submit their project in a portfolio format. This could include freehand sketches on A3 paper as well as screenshots of computer-aided design (CAD) packages as evidence of the design process.

Candidates are recommended to spend around 45 guided learning hours on their Component 2 Product Analysis and Improvement Project. Guidance on the recommended time to be spent on each stage is provided. Please note this is only guidance and there may be variations depending on the chosen project.

The project is internally assessed and externally moderated.

Project stages and evidence to include in the portfolio

The Component 2 project is divided into **six** stages.

Each of these six stages is assessed with a corresponding marking grid which you can find in the section Assessment criteria for Component 2.

For information on the administration of Component 2 please refer to the Administration of Components 2 and 4 section.

1 Identifying and analysing a product for improvement

Candidates are encouraged to identify a product to improve that they can examine from personal experience, rather than remotely. Candidates need to provide a justification for the chosen product. The justification will include supporting evidence to explain the choice of product to be improved.

Candidates must support their choice of product with an analysis of the product in terms of the functions, users, materials used, production processes, safety features and wider issues in design and technology impacting on the design, manufacture and use of the identified product (cultural, economic, environmental and social).

Candidates must provide more than a simple description of the above features and consider the strengths and weaknesses of the chosen product.

Candidates are recommended to spend around **6** guided learning hours on Stage 1.

Evidence to be submitted

The candidate's portfolio must provide the following evidence for the chosen product:

(a) Identification of a suitable product to improve, with supporting justified evidence
- description of the product identified, including photographs and/or sketches
- evidence to justify the selection of the product. This evidence could include:
  - the product does not work well/function as intended
  - additional features can be added to the product identified
  - poor sales/not a popular product
  - the product is outdated – newer technology would improve the product

(b) Analysis of the product and how it functions
- consideration of the original design situation or need
- analysis of intended functions of the product for potential users

(c) Analysis of the users
- identification of users/target group
- identification of user needs
- ergonomic features
- aesthetics

(d) Analysis of the materials used
- properties required
- cost and availability (if relevant)
- recyclable alternatives
- sustainable alternatives

(e) Analysis of the production processes
- production processes
- scale of production (individual (one-off), batch or mass)
- cost considerations
- environmental considerations

(f) Analysis of the safety features
- health and safety considerations, both during manufacture and in the use of the product
- quality control standards applicable (such as use of non-toxic paints or electricity safety) and quality assurance

(g) Analysis of the cultural and social factors
- variations to the product to meet different customer needs
- fashion and trends
- inclusive design
- impact/influence from cultural and social factors/values
- impact/influence from design movements

(h) Analysis of the economic factors
- costs involved in the production of the product
- resources/materials used to produce the product
- energy used to produce the product
- workforce costs to produce the product

(i) Analysis of the environmental factors
- sustainable/recyclable alternative materials
- conservation issues, including extraction, processing and disposal
- sustainability
- energy used during production and in use
- end of life disposal implications

2 Identifying one area for improvement

Candidates compare the chosen product with similar products across the product range. Using the evidence gathered in Stage 1 and the information from the comparison to similar products, candidates identify **one** area for improvement. Candidates must provide a justification of how the product will be improved.

Candidates are recommended to spend around **3** guided learning hours on Stage 2.

Evidence to be submitted
The candidate's portfolio must provide the following evidence for the chosen product from Stage 1:

(a) Product comparison
- compare the performance of the product to:
  - products with similar functions and identify opportunities for improvement
  - other similar products with similar functions across the product range in terms of quality (from basic to high quality products)

Product range is defined as products with similar functions, ranging from high to low quality.

(b) Improvement identification
- identify **one** area of the product that could be improved
- present evidence to justify the selection of the proposed area for improvement

3 Clarifying the design situation or need and generating ideas

Once candidates have identified the area for improvement, they complete a design brief and a design specification for the improvement. The design brief and design specification are only for the area of improvement, not the entire product.

Candidates generate at least **three** ideas for the improvement using an iterative design process. They evaluate the ideas before selecting **one** idea for development.

Candidates are recommended to spend around **10** guided learning hours on Stage 3.

Evidence to be submitted
The candidate's portfolio must provide the following evidence for the chosen improvement:

(a) A design brief for **one** proposed improvement of a product
- a concise design brief that accurately describes a design situation or need

The design brief can include sketches.

(b) A justified design specification for the proposed improvement of a product
- a comprehensive design specification of requirements

The design specification of requirements should include a justification and be measurable.

The design specification should cover **all** the elements of the improvement (not just certain areas). It should be presented as a short list of bullet points.

(c) At least **three** ideas for the improvement of the product
- use of an iterative design approach
- examples of evidence for at least **three** design ideas that the candidate has generated and explored
- evidence to support the design ideas can include annotated sketches, simple models, photographs and computer-aided design (CAD) drawings
- consideration of appropriate materials and manufacturing methods

We recommend that candidates include at least **three** ideas for the improvement of the product. Candidates can submit more than three ideas but they should focus on the quality of the ideas rather than the quantity.

The sketches or CAD models to show the candidates' ideas can be in rough form. They are used to support the candidates' thought process.

(d) Evaluate the ideas for the improvement of the product and select and refine **one** idea for development
- evaluation of at least **three** ideas against the design specification
- selection of **one** idea for development with reasons for choosing the idea
- refinement of the chosen idea for development
- consideration of appropriate materials and production methods for the selected idea for development

4 Developing the design and planning

Candidates further refine and develop the idea they have chosen in Stage 3 to create a design proposal. The design proposal must meet the design specification requirements outlined in Stage 3.

Candidates plan the making of the prototype for the improvement. The prototype will only be for the area of improvement, not for the full product.

Candidates are recommended to spend around **10** guided learning hours on Stage 4.

Evidence to be submitted
The candidate's portfolio must provide the following evidence for the chosen idea:

(a) Refine and develop a design idea into a design proposal
- refine and develop the idea chosen in Stage 3, including consideration of time, cost and resources, into a design proposal. Computer and/or physical modelling can be included at this stage

The working drawings can be accurately hand-drawn and/or screenshots from drawings produced using CAD software programs.

The working drawings should contain sufficient detail for a skilled person to make the design proposal.

(b) Completion of checks to show that the design proposal meets the design specification requirements
- a record of checks to show that the design proposal meets the design specification created in Stage 3

(c) Clear and comprehensive plan for making a prototype to demonstrate an improvement to a product
- working drawings, to a suitable scale, for the making of a prototype of the design proposal
- materials or cutting lists to show the resources needed to make the prototype
- a plan for making the prototype for the proposed improvement (this could include scheduling tools such as flowcharts or Gantt charts)
- a plan for making the prototype for the improvement that fully recognises the constraints of time, cost and resources

Candidates plan how they are going to make the improvement by producing a prototype. A prototype is a functional model built to test an idea.

A clear and comprehensive plan for making a prototype is one that provides sufficient detail for a skilled person to make the prototype.

5 Producing a prototype to demonstrate the improvement

Candidates produce a prototype for the chosen area or element for improvement. The prototype will only be for the improvement, not for the full product. Candidates need to demonstrate that they adhere to safe working practices.

Candidates need to show good attention to accuracy, detail and finish.

Candidates need to physically make the improvement by producing the prototype they have planned in Stage 4.

Candidates are recommended to spend around **10** guided learning hours on Stage 5.

Evidence to be submitted
The candidate's portfolio must provide the following evidence in the making of their chosen idea:

(a) Record the stages in the making process
- photographs of each stage in the making process, with annotations that briefly explain the processes
- evidence of the practical skills accomplished in the making of the prototype. This could include photographs of the candidate while completing a range of skills safely and/or a skill record sheet with a teacher/supervisor signature

(b) Show evidence of consideration of safe working practices during the making process
- notes and high resolution photographs that refer to consideration of safe working practices during the making process
- a teacher's sign-off sheet to show observations made of the candidate performing safe working practices during the making of the prototype

(c) Present evidence to show they have monitored progress during making
- evidence of monitoring of progress in making against the plan for making the prototype for the improvement produced in Stage 4, with variations explained
- evidence of checking during the making that the improvement meets the design brief and design specification produced in Stage 3

(d) Present high resolution photographs of the prototype
- a series of high resolution photographs showing the completed prototype from all angles with close-ups of all its features. The photographs must be clear and of good quality

6 Testing and evaluating the improvement

Candidates produce a plan for testing the improvement they made in Stage 5. Once the plan is complete, they test the functionality of the prototype and complete an evaluation against their design specification. They evaluate the effective and appropriate use of resources and consider the wider issues in design and technology (cultural, economic, environmental and social factors).

Candidates must gather feedback on the improved product from users through observations, questionnaires and interviews.

Once the results from testing and evaluating the prototype and the feedback from the users have been analysed, candidates write their conclusions from the testing and propose further improvements to the prototype.

Candidates are recommended to spend around **6** guided learning hours on Stage 6.

Evidence to be submitted

The candidate's portfolio must provide the following evidence of testing and evaluating their chosen idea:

(a) Produce a plan for testing and evaluating the prototype

- a detailed plan to test and evaluate the prototype produced at Stage 5

(b) Test and evaluate the prototype

- a test of the functionality of the prototype
- an evaluation of the prototype produced in Stage 5 against the design specification created in Stage 3
- a summary of the comments from users. Feedback could be gathered through observations, questionnaires and/or interviews. The summary of feedback should be unbiased, objective and balanced, including any areas for improvement or further investigation as well as positive comments
- an evaluation of the effective and appropriate use of resources
- a summary of the findings from the testing, with conclusions of the tests performed and information on what those tests show about the prototype

(c) Produce proposals for the further development of the prototype

- use the results of the testing and evaluation to propose how to further develop the prototype
- include consideration of production techniques and cultural, economic, environmental and social factors in the suggestions for further improvements

Assessment criteria for Component 2

Weighting for assessment objectives

The approximate weightings allocated to each of the assessment objectives (AOs) for each stage are summarised below.

Stage	Weighting of assessment objectives %			
	AO1	AO2	AO3	AO4
Stage 1 Identifying and analysing a product for improvement (8 marks)	0	0	0	16
Stage 2 Identifying one area for improvement (4 marks)	0	0	0	8
Stage 3 Clarifying the design situation or need and generating ideas (10 marks)	0	0	20	0
Stage 4 Developing the design and planning (10 marks)	0	0	20	0
Stage 5 Producting a prototype to demonstrate the improvement (10 marks)	0	0	20	0
Stage 6 Testing and evaluating the improvement (8 marks)	0	0	0	16
Total			60	40

Marking grids

The candidate's portfolio of work is internally marked and externally moderated using the marking grids below. These remain the same year-on-year.

Stage 1 Identifying and analysing a product for improvement

Candidates should be able to:

- analyse, evaluate and compare products **(AO4a)**
- analyse wider issues in design and technology (including cultural, economic, environmental and social factors) **(AO4d)**

Level	Description	Marks
Level 4	• Identifies a suitable product with a clear and detailed justification. (AO4a) • Clear and detailed analysis of the functions, users, materials used, production processes and safety features of the product identified. The analysis is supported with relevant and detailed evidence. (AO4a) • Analyses more than two wider issues in design and technology impacting on the design, manufacture and use of the product identified. The analysis is supported with relevant and detailed evidence. (AO4d)	7–8
Level 3	• Identifies a suitable product with justification. (AO4a) • Analysis of the functions, users, materials used, production processes and safety features of the product identified. The analysis is supported with relevant evidence. (AO4a) • Analyses two wider issues in design and technology impacting on the design, manufacture and use of the product identified. The analysis is supported with relevant evidence. (AO4d)	5–6
Level 2	• Identifies a suitable product with partial justification. (AO4a) • Partial analysis of the functions, users, materials used, production processes and safety features of the product identified. The analysis is supported with some relevant evidence. (AO4a) • Analyses one wider issue in design and technology impacting on the design, manufacture and use of the product identified. The analysis is supported with some relevant evidence. (AO4d)	3–4
Level 1	• Identifies a product. (AO4a) • Describes the functions, users, materials used, production processes and safety features of the product identified. (AO4a) • Describes the wider issue(s) in design and technology impacting on the design, manufacture and use of the product identified. Limited analysis present. (AO4d)	1–2
Level 0	• No creditable response.	0

Stage 2 Identifying one area for improvement

Candidates should be able to:

- analyse, evaluate and compare products **(AO4a)**
- identify and/or propose how to improve and/or modify products **(AO4b)**

Level	Description	Marks
Level 3	• Makes clear comparisons with similar products across the product range. (AO4a) • Identifies **one** possible improvement with a clear justification of how the product could be improved. (AO4b)	4
Level 2	• Makes some comparisons with other products across the product range. (AO4a) • Identifies **one** possible improvement with some justification of how the product could be improved. (AO4b)	2–3
Level 1	• Limited evidence of comparisons with other products across the product range. (AO4a) • Identifies **one** possible improvement with limited justification of how the product could be improved. (AO4b)	1
Level 0	• No creditable response.	0

Stage 3 Clarifying the design situation or need and generating ideas

Candidates should be able to:

- prepare a design brief relating to a situation or need **(AO3a)**
- analyse needs and produce a design specification, taking account of human, aesthetic, technical and environmental factors **(AO3b)**
- generate conceptual ideas and evaluate them using an iterative design process, leading to the creation of a design proposal **(AO3c)**

Level	Description	Marks
Level 4	• Produces a clear and concise design brief that accurately describes a need. (AO3a) • Produces a clear and comprehensive design specification for the improvement of the product. The design specification is fully justified. (AO3b) • Generates at least three high quality, feasible ideas for the improvement of the product. The thought process for the ideas is fully supported by detailed annotations. (AO3c) • Coherently incorporates appropriate materials and production methods. (AO3c) • Selects and refines one idea with a detailed justification for the idea selected. (AO3c)	8–10
Level 3	• Produces a concise design brief that describes a need. (AO3a) • Produces a comprehensive design specification for the improvement of the product. The design specification includes some justification. (AO3b) • Generates at least three feasible ideas for the improvement of the product. The thought process for the ideas is supported by annotations. (AO3c) • Considers appropriate materials and production methods. (AO3c) • Selects and refines one idea with a justification for the idea selected. (AO3c)	5–7
Level 2	• Produces a design brief that describes a need. (AO3a) • Produces a design specification for the improvement of the product. (AO3b) • Generates three ideas for the improvement of the product. Some of the ideas may lack quality or not be feasible. (AO3c) • Identifies materials and production methods. (AO3c) • Selects one idea with a partial justification for the idea selected. (AO3c)	3–4
Level 1	• Produces a design brief that partially describes a need. (AO3a) • Identifies some design specification points. (AO3b) • Generates fewer than three ideas for the improvement of the product, which may not be feasible. (AO3c) • Names some materials or production methods. (AO3c) • Selects one idea. (AO3c)	1–2
Level 0	• No creditable response.	0

Stage 4 Developing the design and planning

Candidates should be able to:

- refine and develop procedures to finalise a design proposal, recognising the constraints of time, cost and resources, and plan for making **(AO3d)**

Level	Description	Marks
Level 4	• Refines and develops the selected idea into a design proposal. The design proposal completely meets the design specification. (AO3d) • Produces a comprehensive, clear and detailed plan for making, fully recognising the constraints of time, cost and resources. (AO3d)	8–10
Level 3	• Refines and develops the selected idea into a design proposal. The design proposal meets the majority of the design specification points. (AO3d) • Produces a comprehensive and clear plan for making, recognising the majority of the constraints of time, cost and resources. (AO3d)	5–7
Level 2	• Refines and develops the selected idea into a design proposal. The design proposal meets a few of the design specification points. (AO3d) • Produces a plan for making, recognising the constraints of time, cost and resources in a limited way. (AO3d)	3–4
Level 1	• Refines and develops the selected idea into a design proposal. The design proposal meets the design specification in a limited way. (AO3d) • Produces an incomplete plan for making. (AO3d)	1–2
Level 0	• No creditable response.	0

Stage 5 Producing a prototype to demonstrate the improvement

Candidates should be able to:

- realise a design proposal safely and demonstrate proficiency in a range of practical skills with attention to fine detail **(AO3e)**

Level	Description	Marks
Level 4	• Produces a high quality prototype that addresses the design brief, fulfils all points of the design specification and is fit for purpose. (AO3e) • Demonstrates meticulous, consistently good attention to accuracy, detail and finish. (AO3e) • Consistently demonstrates proficient working practices within a wide range of practical skills. (AO3e) • Consistently demonstrates safe working practices. (AO3e)	8–10
Level 3	• Produces a good quality prototype that addresses the design brief, meets the majority of points of the design specification and is fit for purpose. (AO3e) • Demonstrates good attention to accuracy, detail and finish. (AO3e) • Demonstrates proficient working practices within a range of practical skills. (AO3e) • Demonstrates safe working practices. (AO3e)	5–7
Level 2	• Produces a prototype that partially addresses the design brief, meets some points of the design specification and is largely fit for purpose. (AO3e) • Demonstrates some attention to accuracy, detail and finish. (AO3e) • Usually demonstrates proficient working practices within a range of practical skills. (AO3e) • Demonstrates safe working practices with some teacher supervision. (AO3e)	3–4
Level 1	• Produces a prototype that partially addresses the design brief and meets the design specification in a limited way. (AO3e) • Demonstrates limited attention to accuracy, detail and finish. (AO3e) • Demonstrates limited proficient working practices within a limited range of practical skills. (AO3e) • Demonstrates safe working practices with significant teacher supervision. (AO3e)	1–2
Level 0	• No creditable response.	0

Stage 6 Testing and evaluating the improvement

Candidates should be able to:

- identify and/or propose how to improve and/or modify products **(AO4b)**
- test and evaluate products, including evaluating and planning the manufacturing systems used to manufacture products in quantity **(AO4c)**
- analyse wider issues in design and technology (including cultural, economic, environmental and social factors) **(AO4d)**

Level	Description	Marks
Level 4	• Produces a detailed and appropriate plan to test and evaluate the prototype. (AO4c) • Produces an unbiased summary of testing with critical and detailed evaluation of the prototype, including detailed references to the design specification, user comments and use of resources. (AO4c) • Suggests comprehensive, well thought out further developments, including clear and detailed consideration of production techniques and the wider issues in design and technology. (AO4b), (AO4d)	7–8
Level 3	• Produces an appropriate plan to test and evaluate the prototype. (AO4c) • Produces a summary of testing with evaluation of the prototype, including references to the design specification, user comments and use of resources. (AO4c) • Suggests feasible further developments, including consideration of production techniques and the wider issues in design and technology. (AO4b), (AO4d)	5–6
Level 2	• Produces a mostly complete plan to test and evaluate the prototype. (AO4c) • Produces a summary of testing with evaluation of the prototype, including some references to either the design specification or user comments or use of resources. (AO4c) • Suggests further relevant developments, including some consideration of production techniques and some consideration of the wider issues in design and technology. (AO4b), (AO4d)	3–4
Level 1	• Produces an incomplete plan to test and evaluate the prototype. (AO4c) • Produces a partial summary of testing with evaluation of the prototype, which may include limited references to either the design specification or user comments or use of resources. (AO4c) • Suggests some further developments but with little consideration of production techniques and limited consideration of the wider issues in design and technology. (AO4b), (AO4d)	1–2
Level 0	• No creditable response.	0

Paper 3 – A Level Written Paper

Written paper, 2 hours 30 minutes, 100 marks

Candidates answer **all** questions.

Questions are based on the A Level subject content but knowledge of the AS Level subject content is required.

Paper 3 tests the following assessment objectives:

- AO1 Knowledge and understanding: 35%
- AO2 Application and communication: 25%
- AO3 Development of design ideas and practical skills: 25%
- AO4 Analysis and evaluation: 15%.

Paper 3 consists of:

- structured questions
- two extended response questions on the wider issues in design and technology
- one design question.

Candidates should use a black or dark blue pen for written responses. An HB pencil or coloured pencils may be used for any sketches, drawings or rough working.

Candidates answer in the spaces provided on the A4 question paper.

Structured questions (48 marks)

The structured questions test knowledge and understanding of the A Level subject content, although knowledge of the AS Level subject content is required.

Candidates are also asked to demonstrate their communication skills using sketches and notes and a range of graphical techniques, including conventions and specialist vocabulary.

The structured questions can also ask candidates to use sketches and notes and to apply the knowledge and understanding they have acquired to a particular product, scenario or context. Candidates should be able to apply their knowledge and understanding to an unfamiliar product, scenario or context. Knowledge of the context is not required.

The structured questions can be divided into part-questions based on the same product, scenario or context. Candidates must answer all the part-questions for each question.

Candidates should be aware of the marks for each part-question. These are printed on the question paper. Candidate should use them as a guide to the amount of detail and length of response expected and to help them manage their time effectively.

Extended response questions on the wider issues in design and technology (12 marks)

Paper 3 has **two** extended response questions on the wider issues in design and technology. Each question is worth 6 marks. They are marked with the Paper 3 marking grid for AO4d Analysis of the wider issues in design and technology.

The extended response questions ask candidates to discuss an aspect of the A Level subject content and its impact on the wider issues in design and technology.

Candidates should answer in continuous prose and structure their response in paragraphs.

A good response to the 6-mark extended response question should contain a detailed discussion of **more than two** wider issues in design and technology. The analysis should be well-supported with relevant and detailed information.

Candidates should use relevant examples, from their experiences in design and technology, to support their response. The response requires a discussion, not just a description.

Design question (40 marks)

Paper 3 has one design question. Candidates are provided with a design scenario and a simple design specification from which they need to complete a design task.

The design task requires candidates to:

(a) Generate **two** innovative ideas that satisfy the design specification (12 marks)

Marks are awarded for:

- the quality of communication, including conventions and specialist vocabulary
- the quality of the idea with clear reference to the design specification.

(b) Evaluate the **two** ideas and select one (3 marks)

Marks are awarded for the evaluation, comparison with the other idea and for the justification of the selection.

(c) Develop the chosen idea (10 marks)

Marks are awarded for:

- communication
- description of the functions
- naming and justification for selection of materials
- construction details
- an appropriate finish.

(d) Draw the complete design solution (8 marks)

Marks are awarded for:

- the quality of detailed sketches with dimensions
- the design proposal and its inclusion of design/product details.

(e) Write a detailed manufacturing specification, including at least four different manufacturing specification points (5 marks)

Marks are awarded for the number and description of the manufacturing specification points.

(f) Answer a question on an aspect of the final manufactured product (2 marks)

The marking grids for Paper 3 are published in the specimen mark scheme for Paper 3 which accompanies the syllabus. This is available on the syllabus page at **www.cambridgeinternational.org/9705** and our School Support Hub.

Equipment for Paper 3

Candidates should have the following in the examination room:

- standard drawing equipment: pencil, rubber, ruler and protractor
- coloured pencils
- calculator.

Optional design drawing equipment:

- 30°/60° and 45° set squares
- pencil compass
- templates/guides.

Component 4 – Design, Realisation and Manufacturing Project

Coursework, 50 marks, internally assessed and externally moderated, approx. 55 hours

Overview

Candidates identify a design situation or need from a real-world context of their own choice. This component has been designed to be flexible so that candidates can choose an area of design and technology that appeals to them.

Candidates have a choice of materials to make their product. For example, it could be made from resistant materials such as wood, metal or plastics, or it could be made from paper, card, thin sheet plastic or modelling materials, or it could bring in the use of systems and control technology such as electronics where appropriate. Candidates can go beyond the materials listed in Topic 8 Materials and components.

Candidates complete research and generate a range of design ideas to create a design proposal. They develop and refine the design proposal which they then plan to make. The iterative design process should be clearly documented with annotated sketches, photographs and screenshots.

The design proposal is developed, tested and evaluated. It must be possible to test and evaluate the finished product in a meaningful way.

Once candidates have tested and evaluated the product they have made, they propose how the product could be improved, and evaluate the manufacturing system they have used to consider how the product would be produced in quantity for a batch of at least ten products.

Finally, candidates produce a plan to manufacture the product in quantity.

Candidates should not select design proposals that are too large or complex and therefore cannot be realised in the time recommended for Stage 4 Realising the product.

Candidates need to submit their project in a portfolio format. This could include freehand sketches on A3 paper as well as screenshots of computer-aided design (CAD) packages as evidence of the design process.

Candidates are recommended to spend around 55 guided learning hours on their Component 4 Design, Realisation and Manufacturing Project. Guidance on the recommended time to be spent on each stage is provided. Please note this is only guidance and that there may be variations depending on the chosen project.

The project is internally assessed and externally moderated.

Project stages and evidence to include in the portfolio

The Component 4 project is divided into **six** stages.

Each of these six stages is assessed with a corresponding marking grid which you can find in the section Assessment criteria for Component 4.

For information on the administration of Component 4 please refer to the Administration of Components 2 and 4 section.

1 Identifying a situation or need to produce a design brief and design specification

Candidates identify an area to focus their design project on. Once they have identified the design focus area, they research it.

Candidates use the research data they have gathered to identify a design situation or need in that design focus area. Candidates choose one design situation or need to take forward, providing a justification for their choice.

Candidates write a design brief to meet the identified design situation or need. They then complete a design specification for a product that meets the design brief. Each point of the design specification must be fully justified, with references to their research.

Candidates are recommended to spend around **6** guided learning hours on Stage 1.

Evidence to be submitted

The candidate's portfolio must provide the following evidence:

(a) Identify a design focus area for the design project

- description of the chosen design focus area for the design project (for example, storage of toys or packaging of confectionery)

(b) Complete primary and secondary research to identify a situation or need

- summary of the primary and secondary research undertaken into the chosen design focus area
- analysis of the research data and identification of the potential design opportunities
- selection of **one** design situation or need with a justification for the choice

(c) Write a design brief for a product that will meet the identified design situation or need

- clear and concise design brief for a product that will satisfy the selected design situation or need

The design brief can include sketches.

(d) Write a design specification for a product that will meet the design brief

- a design specification that defines the product to meet the design brief, considering:
  - human factors
  - aesthetic factors
  - technical factors
  - environmental factors
- each point of the design specification should be fully justified against the design brief, with references where relevant to the completed research

2 Generating and appraising design ideas leading to a design proposal

Candidates generate at least **three** ideas to meet the design brief and design specification. The ideas must be supported with annotated sketches and research to feed into the design ideas.

Candidates evaluate the **three** ideas against the design specification, using an iterative design process, and produce a design proposal.

Candidates are recommended to spend around **9** guided learning hours on Stage 2.

Evidence to be submitted

The candidate's portfolio must provide the following evidence:

(a) Generate at least **three** ideas

- use of freehand sketches with annotations to communicate a range of innovative ideas
- summary of the research used to inspire the design ideas (for example, design movements or fashion and trends)

Candidates should produce a range of ideas. A range of ideas is considered to be at least **three** ideas that are significantly different. Candidates can submit more than three ideas but they should focus on the quality of the ideas rather than the quantity.

The ideas should satisfy the design brief and design specification produced in Stage 1.

Freehand sketches are a good way of showing creativity in design thinking. Candidates can use electronic devices such as sketching directly on to a tablet with a stylus pen. However, formal CAD drawings such as orthographic views must **not** be submitted in Stage 2.

(b) Evaluate at least **three** ideas

- ongoing evaluation of the ideas
- summative evaluation of the ideas against the design specification produced in Stage 1

(c) Iterative design process used to produce a design proposal

- positive features from the ideas combined and refined to create a design proposal
- further market research of potential end-users completed to create a design proposal
- design proposal checked against the design specification produced in Stage 1

Research takes place in both Stages 1 and 2. In Stage 1 candidates use the research to identify a situation or need. In Stage 2 the research is focused on the information needed to create a design proposal.

3 Developing the product and planning for making

Candidates refine and develop the design proposal considering the time, cost and resources used to produce the product. Candidates produce accurate working drawings for the final design solution.

Candidates produce a plan for making an individual (one-off) product showing all the stages in the correct order to make the product.

Candidates are recommended to spend around **9** guided learning hours on Stage 3.

Evidence to be submitted

The candidate's portfolio must provide the following evidence:

(a) Refine and develop procedures to finalise the design proposal

- record the procedures used to fully develop the design proposal produced in Stage 2
- recognise the following constraints in the design proposal with detail on how they have been considered:
  - time
  - cost
  - resources (materials, tools, equipment and components)

Candidates can use photographs of physical models or screenshots of computer modelling to record the procedures used to develop the design proposal.

(b) Produce working drawings, to a suitable scale and with annotations, for the final design solution

- accurate working drawings, CAD or hand-drawn that show:
  - the number, size and shape of individual parts
  - how the parts fit together
  - the materials and components required
  - the finish
- appropriate drawing methods for working drawings include:
  - orthographic views
  - exploded views
  - isometric or perspective drawings

The working drawings can be accurately hand-drawn and/or can be screenshots from drawings produced using CAD software programs.

(c) Produce cutting lists

- list of materials required to make the product

(d) Plan to make the final design solution
- a plan for making an individual (one-off) product of the final design solution, that shows:
  - the stages in making
  - the correct sequence of making
  - the time required for each stage in the making
  - the materials, tools and equipment required for each stage in the making
  - safety considerations for each stage in the making
- use of appropriate planning and scheduling tools such as:
  - flowcharts
  - Gantt charts

The working drawings and planning and scheduling tools should contain sufficient detail to allow a skilled third party to make an individual (one-off) version of the final design solution.

4 Realising the product

Candidates make the product following their plan for making, monitoring the progress made against the plan.

Candidates must demonstrate proficiency in a range of practical skills and consistently demonstrate safe working practices. The product must be made to a high standard and meet the requirements of the design specification.

Candidates must physically make the product.

Candidates are recommended to spend around **14** guided learning hours on Stage 4.

Evidence to be submitted
The candidate's portfolio must provide the following evidence:

(a) Demonstrate proficiency in a range of practical skills
- high resolution photographs of each stage in the making of the individual (one-off) product proposed in Stage 3
- annotations that explain the processes used in the making of the individual (one-off) product

(b) Show evidence of the consideration of safe working practices during the making process
- identification of hazards and risk assessments in the making of the individual (one-off) product
- notes and high resolution photographs showing consideration of safe working practices during the making of the individual (one-off) product
- evidence of appropriate action being taken if hazards occur or accidents happen when making the individual (one-off) product
- a teacher's sign-off sheet to show observations made of the candidate performing safe working practices during the making of the individual (one-off) product

(c) Realise the product to a high standard
- monitoring of progress in the making of the individual (one-off) product, against the plan for making produced in Stage 3, with any variations to the plan explained
- a series of high resolution photographs that show the completed individual (one-off) product from all angles and with close-ups of features that show:
  - standard of accuracy
  - quality of finish
  - the requirements of the design specification in Stage 1 have been met

5 Testing and evaluating the product

Candidates produce a plan to test and evaluate the product they have made at Stage 4. Once they have produced the plan, they test and evaluate the product, evaluating it against the design specification.

Once the results from the testing and evaluation have been analysed, candidates write their conclusions on the testing and propose further improvements to their product. They also consider how it needs to be modified to manufacture it in quantity for a batch of at least ten products.

Candidates need to evaluate the materials, tools or equipment used to produce their product and propose how they would need to change for the product to be manufactured in quantity.

Candidates are recommended to spend around **9** guided learning hours on Stage 5.

Evidence to be submitted
The candidate's portfolio must provide the following evidence in the testing and evaluating of their product:

(a) Produce a plan for testing their product
- a detailed plan to test and evaluate the individual (one-off) product realised in Stage 4

(b) Test and evaluate the product
- a test of the functionality of the product
- evaluation of the individual (one-off) product realised in Stage 4
- evaluation against the design specification produced in Stage 2
- a summary of the findings from the testing giving conclusions of the tests performed and leading to an evaluation of the product

(c) Include proposals for the further improvement of the product
- use the results of the testing and evaluation to propose how to improve the individual (one-off) product
- propose how the individual (one-off) product would need to be modified for manufacturing in quantity

The quantity to be manufactured must be a batch of at least ten products.

(d) Evaluate the materials, tools or equipment used to make the product
- evaluate the materials, tools or equipment used in the making of the final product in Stage 4, considering the changes required to produce the product in quantity

6 Planning for manufacturing a product in quantity

Candidates produce a plan to manufacture the product in quantity for a batch of at least ten products. They evaluate the implications of manufacturing the product in quantity in terms of cultural, economic, environmental and social factors.

An individual (one-off) product is produced in Stage 4 and evaluated in Stage 5. In Stage 6 candidates are required to plan how to make the individual (one-off) product they have made and evaluated in quantity.

Candidates are recommended to spend around **8** guided learning hours on Stage 6.

Evidence to be submitted
The candidate's portfolio must provide the following evidence:

(a) Plan for manufacturing the product in quantity
- select production and manufacturing systems to produce the individual (one-off) product in quantity
- produce a plan for manufacturing the individual (one-off) product in quantity based on the considerations made in Stage 5
- include quality control procedures such as quality assurance checks made at every stage of the manufacturing and quality control checks made to the finished product

The quantity to be manufactured must be a batch of at least ten products.

(b) Evaluate the wider issues of moving to manufacturing the product in quantity
- evaluate the impact of manufacturing the individual (one-off) product in quantity on:
  - cultural and social factors where appropriate
  - economic factors
  - environmental factors

Assessment criteria for Component 4

Weighting for assessment objectives

The approximate weightings allocated to each of the assessment objectives (AOs) for each stage are summarised below.

Stage	Weighting of assessment objectives %			
	AO1	AO2	AO3	AO4
Stage 1 Identifying a situation or need to produce a design brief and design specification (6 marks)	0	0	12	0
Stage 2 Generating and appraising design ideas leading to a design proposal (8 marks)	0	0	16	0
Stage 3 Developing the product and planning for making (8 marks)	0	0	16	0
Stage 4 Realising the product (12 marks)	0	0	24	0
Stage 5 Testing and evaluating the product (8 marks)	0	0	0	16
Stage 6 Planning for manufacturing a product in quantity (8 marks)	0	0	0	16
Total			68	32

Marking grids

The candidate's portfolio of work is internally marked and externally moderated using the marking grids below. These remain the same year-on-year.

Stage 1 Identifying a situation or need to produce a design brief and design specification

Candidates should be able to:

- prepare a design brief relating to a situation or need **(AO3a)**
- analyse needs and produce a design specification, taking account of human, aesthetic, technical and environmental factors **(AO3b)**

Level	Description	Marks
Level 3	• Identifies a situation or need based on a comprehensive analysis of relevant research, including primary and/or secondary research. (AO3b) • Produces a comprehensive and clear design brief. (AO3a) • The design brief fully meets the identified situation or need. (AO3a) • Produces a detailed and justified design specification. The design specification considers human, aesthetic, technical and environmental factors in a detailed way. (AO3b)	5–6
Level 2	• Identifies a situation or need based on an analysis of some relevant research, including primary and/or secondary research. (AO3b) • Produces a clear design brief. (AO3a) • The design brief meets the identified situation or need. (AO3a) • Produces a justified design specification. The design specification considers some human, aesthetic, technical and environmental factors. (AO3b)	3–4
Level 1	• Identifies a situation or need based on limited research. (AO3b) • Produces a simple design brief. (AO3a) • The design brief is linked to the situation or need. (AO3a) • Produces a design specification. The design specification considers human, aesthetic, technical and environmental factors in a limited way. (AO3b)	1–2
Level 0	• No creditable response.	0

Stage 2 Generating and appraising design ideas leading to a design proposal

Candidates should be able to:

- generate conceptual ideas and evaluate them using an iterative design process, leading to the creation of a design proposal **(AO3c)**

Level	Description	Marks
Level 4	• Generates at least three feasible and innovative ideas. The thought process for the ideas is fully supported by detailed annotations. (AO3c) • Comprehensively evaluates three ideas against the design specification through on-going and summative comments. (AO3c) • Iterative design process used throughout. Clear design development is shown, leading to the creation of a design proposal. (AO3c)	7–8
Level 3	• Generates at least three feasible ideas. The thought process for the ideas is supported by annotations. (AO3c) • Evaluates three ideas against the design specification using some on-going and summative comments. (AO3c) • Iterative design process used in most aspects of the design. Shows some evidence of design development, leading to the creation of a design proposal. (AO3c)	5–6
Level 2	• Generates three ideas. Some of the ideas may lack quality or not be feasible. (AO3c) • Evaluates three ideas against some points from the design specification. (AO3c) • Iterative design process used in some aspects of the design. There is limited evidence of design development, leading to the creation of a design proposal. (AO3c)	3–4
Level 1	• Generates fewer than three ideas, which may not be feasible. (AO3c) • Little evaluation of ideas against the design specification. (AO3c) • Limited use of iterative design process, leading to the creation of a design proposal. (AO3c)	1–2
Level 0	• No creditable response.	0

Stage 3 Developing the product and planning for making

Candidates should be able to:

- refine and develop procedures to finalise a design proposal, recognising the constraints of time, cost and resources, and plan for making **(AO3d)**

Level	Description	Marks
Level 4	• Refined and developed procedures used to finalise a design proposal, recognising the constraints of time, cost and resources (materials, tools, equipment and components). (AO3d) • Produces detailed and accurate drawing/s of the final proposed design solution giving all information necessary to manufacture the design proposal. (AO3d) • Produces a comprehensive and clear plan showing all the relevant stages in the correct order to make the product. (AO3d)	7–8
Level 3	• Mostly refined and developed procedures used to finalise a design proposal, recognising most of the constraints of time, cost and resources (materials, tools, equipment and components). (AO3d) • Produces detailed and accurate drawing/s of the final proposed design solution giving most information necessary to manufacture the design proposal. (AO3d) • Produces a clear plan showing most of the relevant stages in the correct order to make the product. (AO3d)	5–6
Level 2	• Some refined and developed procedures used to finalise a design proposal, recognising some of the constraints of time, cost and resources (materials, tools, equipment and components). (AO3d) • Produces drawing/s of the final proposed design solution giving some information necessary to manufacture the design proposal. (AO3d) • Produces an appropriate plan showing some relevant stages mostly in the correct order to make the product. (AO3d)	3–4
Level 1	• Limited refinement and development of procedures used to finalise a design proposal, recognising in a limited way the constraints of time, cost and resources (materials, tools, equipment and components). (AO3d) • Produces drawing/s of the final proposed design solution giving limited information necessary to manufacture the design proposal. (AO3d) • Produces a plan showing some stages required to make the product. (AO3d)	1–2
Level 0	• No creditable response.	0

Stage 4 Realising the product

Candidates should be able to:

- realise a design proposal safely and demonstrate proficiency in a range of practical skills with attention to fine detail **(AO3e)**

Level	Description	Marks
Level 4	• Consistently demonstrates proficiency in a wide range of practical skills with consistent attention to fine detail. (AO3e) • Consistently demonstrates safe working practices. (AO3e) • Completes the final product to a high standard, in terms of accuracy and finish. (AO3e) • The final product meets the requirements of the design specification. (AO3e)	10–12
Level 3	• Demonstrates proficiency in a range of practical skills with attention to fine detail. (AO3e) • Demonstrates safe working practices. (AO3e) • Completes the final product to a good standard, in terms of accuracy and finish. (AO3e) • The final product meets the majority of requirements of the design specification. (AO3e)	7–9
Level 2	• Demonstrates some proficiency in a range of practical skills showing some attention to detail. (AO3e) • Demonstrates safe working practices with some teacher supervision. (AO3e) • Completes the final product to a satisfactory standard, in terms of accuracy and finish. (AO3e) • The final product meets some of the requirements of the design specification. (AO3e)	4–6
Level 1	• Demonstrates a limited range of practical skills with limited attention to detail. (AO3e) • Demonstrates safe working practices with significant teacher supervision. (AO3e) • The final product may be of a low standard or incomplete. (AO3e) • The final product meets the requirements of the design specification in a limited way. (AO3e)	1–3
Level 0	• No creditable response.	0

Stage 5 Testing and evaluating the product

Candidates should be able to:

- identify and/or propose how to improve and/or modify products **(AO4b)**
- test and evaluate products, including evaluating and planning the manufacturing systems used to manufacture products in quantity **(AO4c)**

Level	Description	Marks
Level 4	• Completes a range of appropriate tests. (AO4c) • Includes a full critical evaluation of the final product against the design specification. (AO4c) • Proposes detailed and appropriate modifications and improvements to the product required for manufacturing in quantity. (AO4b) • Evaluates fully the tools and equipment used in the realisation of the final product, with detailed consideration of the changes required to move to manufacturing in quantity. (AO4c)	7–8
Level 3	• Completes appropriate tests. (AO4c) • Includes a critical evaluation of the final product against the design specification. (AO4c) • Proposes appropriate modifications and improvements to the product required for manufacturing in quantity. (AO4b) • Evaluates the majority of tools and equipment used in the realisation of the final product, with consideration of the changes required to move to manufacturing in quantity. (AO4c)	5–6
Level 2	• Completes some appropriate tests. (AO4c) • Includes an evaluation of the final product against the design specification. (AO4c) • Proposes some relevant modifications and improvements to the product required for manufacturing in quantity. (AO4b) • Evaluates a few of the tools and equipment used in the realisation of the final product, with some consideration of the changes required to move to manufacturing in quantity. (AO4c)	3–4
Level 1	• Completes limited testing. (AO4c) • Includes a limited evaluation of the final product against the design specification. (AO4c) • Proposes limited modifications and improvements to the product required for manufacturing in quantity. (AO4b) • Describes the tools and equipment used in the realisation of the final product, with limited consideration of the changes required to move to manufacturing in quantity. (AO4c)	1–2
Level 0	• No creditable response.	0

Stage 6 Planning for manufacturing a product in quantity

Candidates should be able to:

- test and evaluate products, including evaluating and planning the manufacturing systems used to manufacture products in quantity **(AO4c)**
- analyse wider issues in design and technology (including cultural, economic, environmental and social factors) **(AO4d)**

Level	Description	Marks
Level 4	• Analyses more than three wider issues (including cultural, economic, environmental and social factors) of moving to manufacturing in quantity. The analysis is well-supported with relevant and detailed information. (AO4d) • Produces a comprehensive and detailed plan for manufacturing the final product in quantity. (AO4c)	7–8
Level 3	• Analyses at least three wider issues (including cultural, economic, environmental and social factors) of moving to manufacturing in quantity. The analysis is supported with relevant information. (AO4d) • Produces a detailed plan for manufacturing the final product in quantity. (AO4c)	5–6
Level 2	• Analyses at least two wider issues (including cultural, economic, environmental and social factors) of moving to manufacturing in quantity. The analysis is supported with some relevant information. (AO4d) • Produces a plan for manufacturing the final product in quantity. (AO4c)	3–4
Level 1	• Describes at least one wider issue (including cultural, economic, environmental and social factors) of moving to manufacturing in quantity. The description is supported with limited relevant information. (AO4d) • Produces an incomplete plan for manufacturing the final product in quantity. (AO4c)	1–2
Level 0	• No creditable response.	0

Administration of Components 2 and 4

Using the samples database

The samples database refers you to key information about administering coursework for each syllabus.

Use the database to find out:

- when and how to submit your marks for moderated coursework
- when and how to submit your candidates' work
- which forms to complete and return with your candidates' work.

The samples database at **www.cambridgeinternational.org/samples** will ask you for:

- The qualification type (e.g. Cambridge International AS & A Level, Cambridge IGCSE and O Level, Cambridge Checkpoint Global Perspectives)
- Your country / territory
- The series (e.g. June, November)
- The syllabus code (i.e. 9705 for this syllabus).

The samples database will then take you to the information you need, including dates and methods of submission of candidates' marks and work, as well as any forms you may need to complete.

Recording and submitting candidates' marks and work

Please refer to the samples database at **www.cambridgeinternational.org/samples** for information, dates and methods of submission of candidates' marks and work. You should follow the instructions for Components 2 and 4 on the samples database.

You should record marks on the required form(s) which you should download each year from the samples database at **www.cambridgeinternational.org/samples**. Follow the instructions on the form to complete it. The marks on these forms must be identical to the marks you submit to Cambridge International.

Internal moderation

If more than one teacher in your centre is marking internal assessments, you must make arrangements to moderate or standardise your teachers' marking so that all candidates are assessed to a common standard. (If only one teacher is marking internal assessments, no internal moderation is necessary.) You can find further information on the process of internal moderation in the *Cambridge Handbook* and on the samples database for the relevant year of assessment.

You must record the internally moderated marks for all candidates on the Coursework Assessment Summary Form for Components 2 and 4 and submit these marks to Cambridge International according to the instructions on the samples database at **www.cambridgeinternational.org/samples**

Internal moderation for centres in Mauritius

If more than one teacher in your centre is marking internal assessments, you must make arrangements to moderate or standardise your teachers' marking so that all candidates are assessed to a common standard. (If only one teacher is marking internal assessments, no internal moderation is necessary.) You can find further information on the process of internal moderation in the *Cambridge Handbook* and on the samples database for the relevant year of assessment.

You must record the internally moderated marks for all candidates on the Coursework Assessment Summary Form for Components 2 and 4 and submit these marks to the Mauritius Examinations Syndicate (MES).

External moderation

Cambridge International will externally moderate all internally assessed components.

- You must submit the marks of all candidates to Cambridge International.
- You must also submit the marked work of a sample of candidates to Cambridge International.

The sample you submit to Cambridge International should ideally include examples of the marking of each teacher. The samples database at **www.cambridgeinternational.org/samples** explains how the sample will be selected.

The samples database at **www.cambridgeinternational.org/samples** also provides details of how to submit the marks and work.

External moderators will produce a short report for each centre with feedback on your marking and administration of the assessment.

External moderation for centres in Mauritius

Moderators appointed by the Mauritius Examinations Syndicate (MES) will moderate all marking by centres on behalf of Cambridge International.

- You must submit the marks of all candidates to MES on the Coursework Assessment Summary Form available on the samples database at **www.cambridgeinternational.org/samples**
- You must also submit the marked work of a sample of candidates to MES. The sample you submit should include examples of the marking of each teacher.
- You can also submit the Individual Candidate Record Cards to MES, to support the marks you have awarded for each candidate selected for the sample.

After moderation in Mauritius, MES will send a representative sample to Cambridge International.

Supervising coursework

Coursework must be a candidate's own, unaided work. The teacher must be able to authenticate the work is the candidate's own.

A general discussion on the progress of coursework is a natural part of the teacher–candidate relationship, as it is for other parts of the course. Candidates can revise their work following feedback, but teachers should only give brief summative comments on progress.

Teachers can support candidates by reviewing their work before it is handed in for final assessment. Teachers can do this orally or through written feedback. Teachers should not correct or edit draft coursework. Advice should be kept at a general level so that the candidate leads the discussion and makes the suggestions for any amendments. Teachers must not give detailed advice to individual candidates or groups of candidates on how their work can be improved to meet the assessment criteria.

Teachers should not allow students to proceed with practical work in an unsafe way.

For further information about supervising coursework, see the *Cambridge Handbook* for the relevant year of assessment at **http://www.cambridgeinternational.org/eoguide**

Authenticity and academic honesty

It is the centre's responsibility to make sure all assessed work is the candidate's original work. Candidates must **not** submit someone else's work as their own, or use material produced by someone else without citing and referencing it properly. You should make candidates aware of the academic conventions governing quotation and reference to the work of others and teach candidates how to use them.

A candidate taking someone else's work or ideas and passing them off as their own is an example of plagiarism. It is your responsibility as a teacher to prevent plagiarism from happening and to detect it if it does happen. For more information, search for 'Preventing plagiarism – guidance for teachers' on our website at **www.cambridgeinternational.org/teachingandassessment**

You will be requested to declare the authenticity of the work at the point of submitting the work. The candidate must sign a statement confirming that they are submitting their own work. You countersign it to confirm that you believe the work is theirs. Centres should use the cover sheet on the samples database for this purpose, and it must be included as part of the portfolio of evidence.

Submission requirements

Centres must **not** send 3D models or products to Cambridge International for moderation purposes.

Centres should keep all records and supported written work until publication of results.

The design folios submitted to Cambridge should be in paper format no larger than A3.

Command words

Command words and their meanings help candidates know what is expected from them in the exams. The table below includes command words used in the assessment for this syllabus. The use of the command word will relate to the subject context.

Command word	What it means
Analyse	examine in detail to show meaning, identify elements and the relationship between them
Assess	make an informed judgement
Calculate	work out from given facts, figures or information
Compare	identify/comment on similarities and/or differences
Define	give precise meaning
Describe	state the points of a topic / give characteristics and main features
Discuss	write about issue(s) or topic(s) in depth in a structured way
Evaluate	judge or calculate the quality, importance, amount, or value of something
Explain	set out purposes or reasons / make the relationships between things clear / say why and/or how and support with relevant evidence
Give	produce an answer from a given source or recall/memory
Identify	name/select/recognise
Justify	support a case with evidence/argument
Outline	set out the main points
Sketch	make a simple freehand drawing showing the key features, taking care over proportions
State	express in clear terms
Suggest	apply knowledge and understanding to situations where there are a range of valid responses in order to make proposals / put forward considerations

Phrases such as ‘Use sketches and notes to show/describe ...?’ may also be seen in the assessment for this syllabus.

5 What else you need to know

This section is an overview of other information you need to know about this syllabus. It will help to share the administrative information with your exams officer so they know when you will need their support. Find more information about our administrative processes at **www.cambridgeinternational.org/eoguide**

Before you start

Previous study

We recommend that learners starting this course should have completed a course in Design & Technology equivalent to Cambridge IGCSE™ or Cambridge O Level.

Guided learning hours

We design Cambridge International AS & A Level syllabuses to require about 180 guided learning hours for each Cambridge International AS Level and about 360 guided learning hours for a Cambridge International A Level. The number of hours a learner needs to achieve the qualification may vary according to each school and the learners' previous experience of the subject.

Availability and timetables

All Cambridge schools are allocated to one of six administrative zones. Each zone has a specific timetable. Find your administrative zone at **www.cambridgeinternational.org/adminzone**

You can view the timetable for your administrative zone at **www.cambridgeinternational.org/timetables**

You can enter candidates in the June and November exam series.

Check you are using the syllabus for the year the candidate is taking the exam.

Private candidates cannot enter for this syllabus. For more information, please refer to the *Cambridge Guide to Making Entries*.

Combining with other syllabuses

Candidates can take this syllabus alongside other Cambridge International syllabuses in a single exam series. The only exceptions are:

- syllabuses with the same title at the same level.

Group awards: Cambridge AICE Diploma

Cambridge AICE Diploma (Advanced International Certificate of Education) is a group award for Cambridge International AS & A Level. It encourages schools to offer a broad and balanced curriculum by recognising the achievements of learners who pass exams in a range of different subjects.

Learn more about Cambridge AICE Diploma at **www.cambridgeinternational.org/aice**

Making entries

Exams officers are responsible for submitting entries. We encourage them to work closely with you to make sure they enter the right number of candidates for the right combination of syllabus components. Entry option codes and instructions for submitting entries are in the *Cambridge Guide to Making Entries*. Your exams officer has access to this guide.

Exam administration

To keep our exams secure, we produce question papers for different areas of the world, known as administrative zones. We allocate all Cambridge schools to an administrative zone determined by their location. Each zone has a specific timetable.

Some of our syllabuses offer candidates different assessment options. An entry option code is used to identify the components the candidate will take relevant to the administrative zone and the available assessment options.

Support for exams officers

We know how important exams officers are to the successful running of exams. We provide them with the support they need to make entries on time. Your exams officer will find this support, and guidance for all other phases of the Cambridge Exams Cycle, at **www.cambridgeinternational.org/eoguide**

Retakes and carrying forward marks

Candidates can retake Cambridge International AS Level and Cambridge International A Level as many times as they want to.

Learn more about retake entries, including definitions and information on entry deadlines, at **www.cambridgeinternational.org/retakes**

Candidates can carry forward their Cambridge International AS Level marks from one series to complete their Cambridge International A Level in a following series. The rules, time limits and regulations for carry-forward entries can be found in the *Cambridge Handbook* for the relevant year of assessment and the *Carry-forward regulations supplement* at **www.cambridgeinternational.org/eoguide**

Candidates cannot resubmit, in whole or in part, coursework from a previous series for re-marking. For information, refer to the Cambridge Handbook for the relevant year of assessment at **www.cambridgeinternational.org/eoguide**

Marks achieved in Component 2 Product Analysis and Improvement Project and Component 4 Design, Realisation and Manufacturing Project can be carried forward to future series, subject to the requirements set out in the *Cambridge Handbook* for the relevant year of assessment and the *Carry-forward regulations supplement* at **www.cambridgeinternational.org/eoguide**

Marks achieved in Component 2 Product Analysis and Improvement Project and Component 4 Design, Realisation and Manufacturing Project can be carried forward on their own to complete an AS Level or an A Level. This is only allowed if:

- all other components of the AS Level (Paper 1 AS Level Written Paper) are taken in the series that the candidate completes their AS Level

or

- all other components of the A Level (Paper 1 AS Level Written Paper and Paper 3 A Level Written Paper) are taken in the series that the candidate completes their A Level.

It is not possible to carry forward only Component 4 Design, Realisation and Manufacturing Project. If both Component 2 Product Analysis and Improvement Project and Component 4 Design, Realisation and Manufacturing Project are carried forward, they do not need to have been submitted in the same series.

An AS Level which consists of Paper 1 AS Level Written Paper which was taken in one series, e.g. November 2025, and coursework Component 2 Product Analysis and Improvement Project which was submitted in an earlier series, e.g. June 2025, cannot be carried forward to complete an A Level in a future series.

For information, refer to the *Cambridge Handbook* for the relevant year of assessment and the *Carry-forward regulations supplement* at **www.cambridgeinternational.org/eoguide]**

To confirm what entry options are available for this syllabus, refer to the *Cambridge Guide to Making Entries* for the relevant series.

Language

This syllabus and the related assessment materials are available in English only.

Accessibility and equality

Syllabus and assessment design

At Cambridge we recognise that our candidates have highly diverse socio-economic, cultural and linguistic backgrounds, and may also have a variety of protected characteristics. Protected characteristics include special educational needs and disability (SEND), religion and belief, and characteristics related to gender and identity.

We follow accessible design principles to make our syllabuses and assessment materials as accessible and inclusive as possible. We review language accessibility, visual resources, question layout and the contexts used in questions. Using this approach means that we give all candidates the fairest possible opportunity to demonstrate their knowledge, skills and understanding.

Access arrangements

Our design principles aim to make sure our assessment materials are accessible for all candidates. To further minimise barriers faced by candidates with SEND, illness or injury, we offer a range of access arrangements and modified papers. This is the principal way in which we comply with our duty to make 'reasonable adjustments', as guided by the UK Equality Act 2010.

Important:

Requested access arrangements should be based on evidence of the candidate's barrier to taking an assessment and should also reflect their normal way of working. For Cambridge to approve an access arrangement, we need to agree that it constitutes a reasonable adjustment and does not affect the security or integrity of the assessment. This is explained in section 1.3 of the *Cambridge Handbook* **www.cambridgeinternational.org/eoguide**

Applying for access arrangements

- Details of our standard access arrangements and modified question papers are available in section 1.3 of the *Cambridge Handbook* **www.cambridgeinternational.org/eoguide**
- Centres are expected to check the availability of access arrangements and modified question papers at the start of the course. Check the *Cambridge Handbook*, the assessment objectives listed in the syllabus document and, where applicable, any access arrangement restrictions listed in the syllabus document.
- Contact us at the start of the course to find out if we can approve an access arrangement that is not listed in the *Cambridge Handbook*.
- All applications should be made by the deadlines published in the *Cambridge Handbook*.

After the exam

Grading and reporting

Grades a, b, c, d or e indicate the standard a candidate achieved at Cambridge International AS Level. 'a' is the highest and 'e' is the lowest grade.

Grades A*, A, B, C, D or E indicate the standard a candidate achieved at Cambridge International A Level. A* is the highest and E is the lowest grade.

'Ungraded' means that the candidate's performance did not meet the standard required for the lowest grade (E or e). 'Ungraded' is reported on the statement of results but not on the certificate. In specific circumstances your candidates may see one of the following letters on their statement of results:

- Q (PENDING)
- X (NO RESULT).

These letters do not appear on the certificate.

If a candidate takes a Cambridge International A Level and fails to achieve grade E or higher, a Cambridge International AS Level grade will be awarded if both of the following apply:

- the components taken for the Cambridge International A Level by the candidate in that series included all the components making up a Cambridge International AS Level
- the candidate's performance on the AS Level components was sufficient to merit the award of a Cambridge International AS Level grade.

On the statement of results, Cambridge International AS & A Levels are shown as General Certificates of Education Advanced Subsidiary Level and Advanced Level, GCE Advanced Subsidiary Level (GCE AS Level) and GCE Advanced Level (GCE A Level).

On the certificates, Cambridge International AS & A Levels are shown as General Certificate of Education.

School feedback: 'Cambridge International A Levels are the 'gold standard' qualification. They are based on rigorous, academic syllabuses that are accessible to students from a wide range of abilities yet have the capacity to stretch our most able.'

Feedback from: Director of Studies, Auckland Grammar School, New Zealand

How students, teachers and higher education can use the grades

Cambridge International A Level

Assessment at Cambridge International A Level has two purposes:

1 to measure learning and achievement

The assessment confirms achievement and performance in relation to the knowledge, understanding and skills specified in the syllabus.

2 to show likely future success

The outcomes help predict which students are well prepared for a particular course or career and/or which students are more likely to be successful.

The outcomes help students choose the most suitable course or career

Cambridge International AS Level

Assessment at Cambridge International AS Level has two purposes:

1 to measure learning and achievement

The assessment confirms achievement and performance in relation to the knowledge, understanding and skills specified in the syllabus.

2 to show likely future success

The outcomes help predict which students are well prepared for a particular course or career and/or which students are more likely to be successful.

The outcomes help students choose the most suitable course or career

The outcomes help decide whether students part way through a Cambridge International A Level course are making enough progress to continue

The outcomes guide teaching and learning in the next stages of the Cambridge International A Level course.

Changes to this syllabus for 2028, 2029 and 2030

The syllabus has been updated. This is version 1, published September 2025.

You must read the whole syllabus before planning your teaching programme. We review our syllabuses regularly to make sure they continue to meet the needs of our schools. In updating this syllabus, we have made it easier for teachers and students to understand, keeping the familiar features that teachers and schools value.

Changes to version 1 of the syllabus, published September 2025

Changes to syllabus content	**AS Level subject content:** 3 Communication content • The header has been changed from Presentation techniques to 2D and 3D presentation techniques 8 Materials and components content • brass has been added to Metals – non-ferrous metals and their alloys • fluted or corrugated polypropylene (Corriflute®) has been added to Polymers – thermoplastics • rubber has been added to Polymers – elastomers **A Level subject content:** 16 Materials processing in industry • solvent cement (Tensol 12®) has been added to How similar and dissimilar materials are joined – permanently – with adhesives
Changes to assessment (including changes to specimen papers)	• On page 37, we have amended the Overview section for Component 2 Product Analysis and Improvement Project for clarity.

Significant changes to the syllabus are indicated by black vertical lines either side of the text.

Syllabuses and specimen materials represent the final authority on the content and structure of all of our assessments.

With a Customer Services team available 24 hours a day, 6 days a week, and dedicated regional teams supporting schools in 160 countries, we understand your local context and are here to guide you so you can provide your learners with everything they need to prepare for Cambridge International AS & A Level.

Quality management

We are committed to providing exceptional quality. In line with this commitment, our quality management system for the provision of international education programmes and qualifications for students aged 5 to 19 is independently certified as meeting the internationally recognised standard, ISO 9001:2015. Learn more at **www.cambridgeinternational.org/about-us/our-standards/**

School feedback: ‘While studying Cambridge IGCSE and Cambridge International A Levels, students broaden their horizons through a global perspective and develop a lasting passion for learning.’

Feedback from: Zhai Xiaoning, Deputy Principal, The High School Affiliated to Renmin University of China

We are committed to making our documents accessible in accordance with the WCAG 2.1 Standard. We are always looking to improve the accessibility of our documents. If you find any problems or you think we are not meeting accessibility requirements, contact us at **info@cambridgeinternational.org** with the subject heading: Digital accessibility. If you need this document in a different format, contact us and supply your name, email address and requirements and we will respond within 15 working days.

Cambridge International Education, The Triangle Building, Shaftesbury Road, Cambridge, CB2 8EA, United Kingdom

t: +44 (0)1223 553554 email: info@cambridgeinternational.org www.cambridgeinternational.org

© Cambridge University Press & Assessment September 2025