CAMBRIDGE
International Education

Cambridge International AS & A Level

CANDIDATE NAME	

CENTRE NUMBER						CANDIDATE NUMBER				

DESIGN & TECHNOLOGY **9705/31**

Paper 3 A Level Written Paper **May/June 2026**

2 hours 30 minutes

You must answer on the question paper.

You will need: Standard drawing equipment
Coloured pencils
Calculator

INSTRUCTIONS

- Answer **all** questions.
- Use a black or dark blue pen.
- Write your name, centre number and candidate number in the boxes at the top of the page.
- Write your answer to each question in the space provided.
- Do **not** use an erasable pen. Do **not** use correction fluid or tape.
- Do **not** write on any bar codes.
- You may use a pencil or coloured pencils for any sketches, drawings or rough working.
- You may use 30°/60° and 45° set squares, a pencil compass and templates/guides if appropriate for any sketches or drawings.

INFORMATION

- The total mark for this paper is 100.
- The number of marks for each question or part question is shown in brackets [ ].
- All dimensions are in millimetres, unless otherwise stated.

This document has **20** pages. Any blank pages are indicated.

DC (LO) 369846
© Cambridge University Press & Assessment 2026

BLANK PAGE

DO NOT WRITE IN THIS MARGIN

Answer **all** questions.

1 Figure 1.1 shows details of a photograph holder.

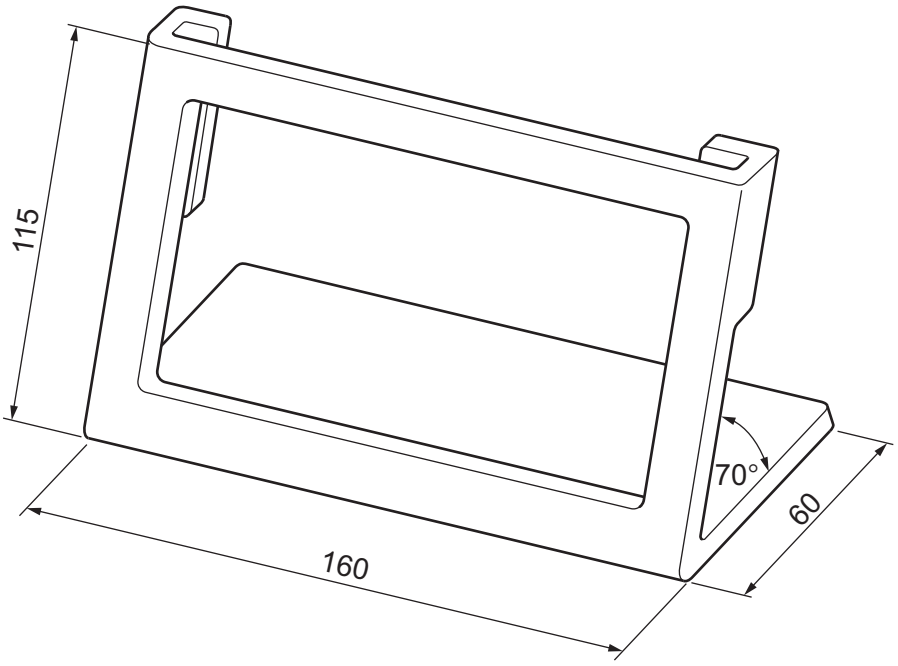

Figure 1.1

(a) State a suitable material for the photograph holder shown in Figure 1.1.

Give **two** reasons to justify your choice.

material .....

reason 1 .....

.....

reason 2 .....

.....

[3]

DO NOT WRITE IN THIS MARGIN

(b) Use sketches and notes to show how you would make **one** photograph holder, as shown in Figure 1.1, in a school workshop.

In your response, you should give details of any tools and equipment you would use.

[9]

© Cambridge University Press & Assessment 2026

DO NOT WRITE IN THIS MARGIN

(c) Use sketches and notes to describe the changes which may be necessary to the design, the manufacturing method and the material selected, to produce 50 identical photograph holders.

[8]

© Cambridge University Press & Assessment 2026

DO NOT WRITE IN THIS MARGIN
DO NOT WRITE IN THIS MARGIN
DO NOT WRITE IN THIS MARGIN
DO NOT WRITE IN THIS MARGIN
DO NOT WRITE IN THIS MARGIN

2 **(a)** Figure 2.1 shows a kayak produced by rotational moulding.

Use sketches and notes to show the process of rotational moulding.

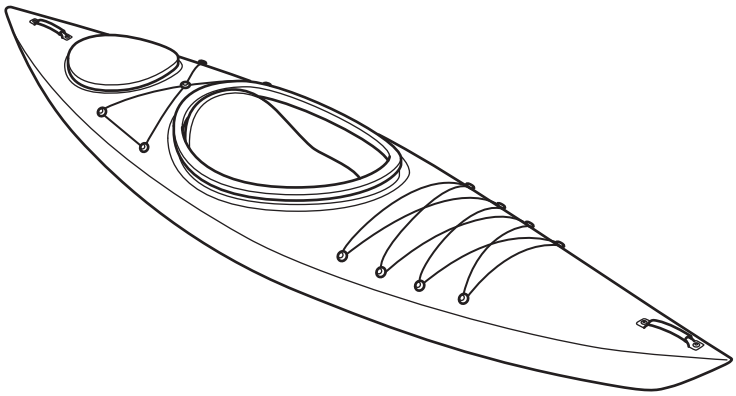

Figure 2.1

[4]

(b) Explain what is meant by the term ‘marketable product’.

.....

.....

.....

..... [2]

© Cambridge University Press & Assessment 2026

DO NOT WRITE IN THIS MARGIN

(c) Explain **two** reasons why a manufacturing specification is produced.

1 .....

.....

.....

.....

2 .....

.....

.....

.....

[4]

DO NOT WRITE IN THIS MARGIN

3 **(a)** Explain the growth stage in a product's life cycle.

.....

.....

.....

.....

.....

..... [3]

(b) Explain **one** disadvantage of updating packaging as a product extension strategy.

.....

.....

.....

.....

.....

..... [3]

(c) Explain **two** factors that would determine the unit cost of a product.

1 .....

.....

.....

.....

2 .....

.....

.....

.....

[4]

DO NOT WRITE IN THIS MARGIN

4 **(a)** Describe the function of the design and development service sector in the design and manufacturing industry.

.....

.....

.....

..... [2]

(b) Explain **one** benefit to employees of mass production systems.

.....

.....

.....

..... [2]

(c) Discuss the importance of digital technology in the development of products.

.....

.....

.....

.....

.....

.....

.....

.....

.....

.....

.....

..... [6]

DO NOT WRITE IN THIS MARGIN

5 **(a)** Describe **one** benefit of using technical drawing software in the designing of products.

.....

.....

.....

..... [2]

(b) Explain how a template is used when designing and making products.

.....

.....

.....

..... [2]

(c) Discuss the benefits to a company of adopting a continuous improvement process such as Kaizen.

.....

.....

.....

.....

.....

.....

.....

.....

.....

.....

.....

..... [6]

DO NOT WRITE IN THIS MARGIN

DO NOT WRITE IN THIS MARGIN

Turn over

6 A university offers student accommodation. A study unit is needed for each student room.

The design specification states that the study unit must:

- be foldable or able to be assembled and disassembled to make the best use of available space
- have a work surface to write on or to support a laptop computer
- be manufactured as a batch of 100.

(a) Use sketches and notes to produce **two** different innovative ideas for the study unit.

(i) Idea 1

[6]

© Cambridge University Press & Assessment 2026

DO NOT WRITE IN THIS MARGIN

(ii) Idea 2

[6]

DO NOT WRITE IN THIS MARGIN

(b) Evaluate your **two** ideas for the study unit to select a final proposal for development.

Justify your selection.

.....

.....

.....

.....

.....

.....

.....

..... [3]

DO NOT WRITE IN THIS MARGIN

DO NOT WRITE IN THIS MARGIN

Turn over

(c) Use sketches and notes to develop your chosen idea to show details of functions, materials, construction and finishes.

[10]

© Cambridge University Press & Assessment 2026

DO NOT WRITE IN THIS MARGIN

(d) Use a method of your own choice to draw the complete design solution.

Include key details and dimensions.

[8]

DO NOT WRITE IN THIS MARGIN

(e) Write a detailed **manufacturing** specification for your chosen idea.

Your answer should include at least **four** different manufacturing specification points.

.....

.....

.....

.....

.....

.....

.....

.....

.....

.....

.....

..... [5]

(f) Explain **one** advantage of using modelling when designing a product such as a study unit.

.....

.....

.....

..... [2]

DO NOT WRITE IN THIS MARGIN

BLANK PAGE

DO NOT WRITE IN THIS MARGIN

BLANK PAGE

Permission to reproduce items where third-party owned material protected by copyright is included has been sought and cleared where possible. Every reasonable effort has been made by the publisher (Cambridge University Press & Assessment) to trace copyright holders, but if any items requiring clearance have unwittingly been included, the publisher will be pleased to make amends at the earliest possible opportunity.

To avoid the issue of disclosure of answer-related information to candidates, all copyright acknowledgements are reproduced online in our Copyright Acknowledgements Booklet. This is produced for each series of examinations and is freely available to download at www.cambridgeinternational.org after the live examination series.

Cambridge International Education is the name of our awarding body and a part of Cambridge University Press & Assessment, which is a department of the University of Cambridge.

© Cambridge University Press & Assessment 2026

DO NOT WRITE IN THIS MARGIN
DO NOT WRITE IN THIS MARGIN
DO NOT WRITE IN THIS MARGIN
DO NOT WRITE IN THIS MARGIN
DO NOT WRITE IN THIS MARGIN